TESSERA 4x4 OFF ROAD ACCESSORIES

Think Quality!

Tessera SE/SE+

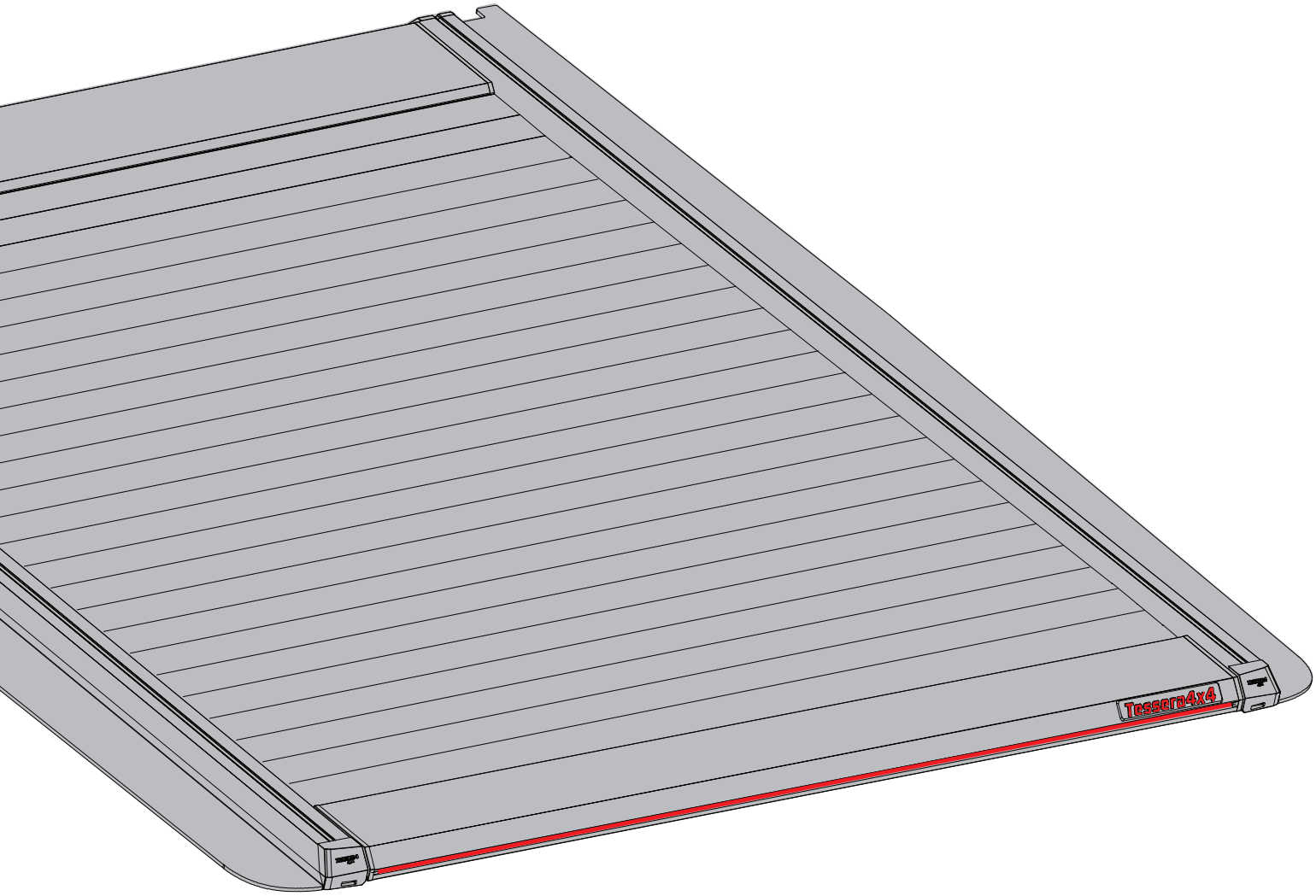

Installation Manual

PART NUMBER(S)		Model Year
TESS 15060 SE	TESS 16060 SE+	FORD RANGER 2023+ (P 703) (no c-channels)
TESS 15070 SE	TESS 16070 SE+	
Cab(s)		**Installation Time / Weight**
Double Cab & Space cab		40-60 minutes / 53-57 kg

Ver.: 1.7

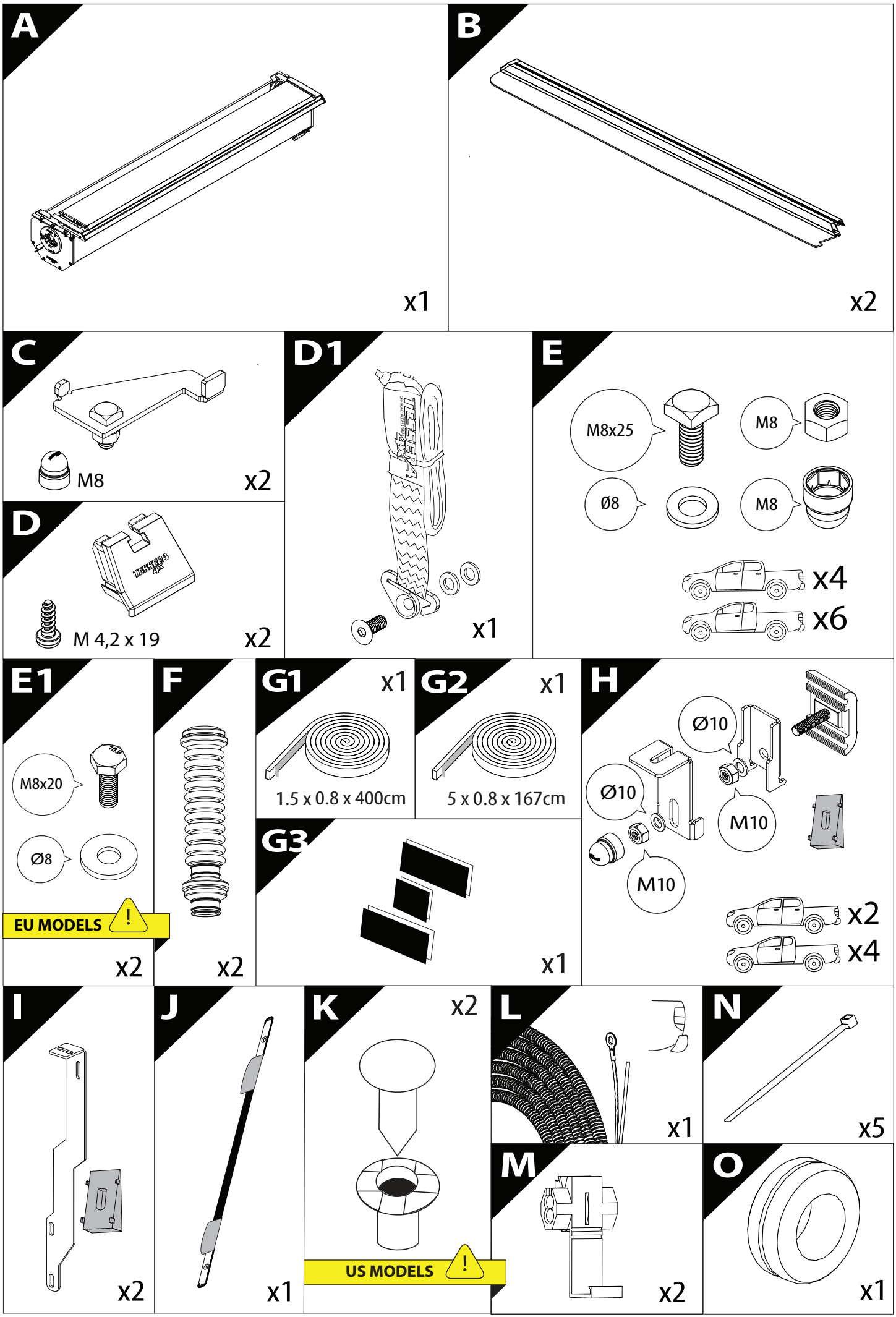
A
x1
B
x2
C
M8
x2
D
M 4,2 x 19
x2
D1
x1
E
M8x25
M8
Ø8
M8
x4
x6
E1
M8x20
Ø8
EU MODELS
x2
F
x2
G1
x1
1.5 x 0.8 x 400cm
G2
x1
5 x 0.8 x 167cm
G3
x1
H
Ø10
Ø10
M10
M10
x2
x4
I
x2
J
x1
K
x2
US MODELS
L
x1
N
x5
M
x2
O
x1

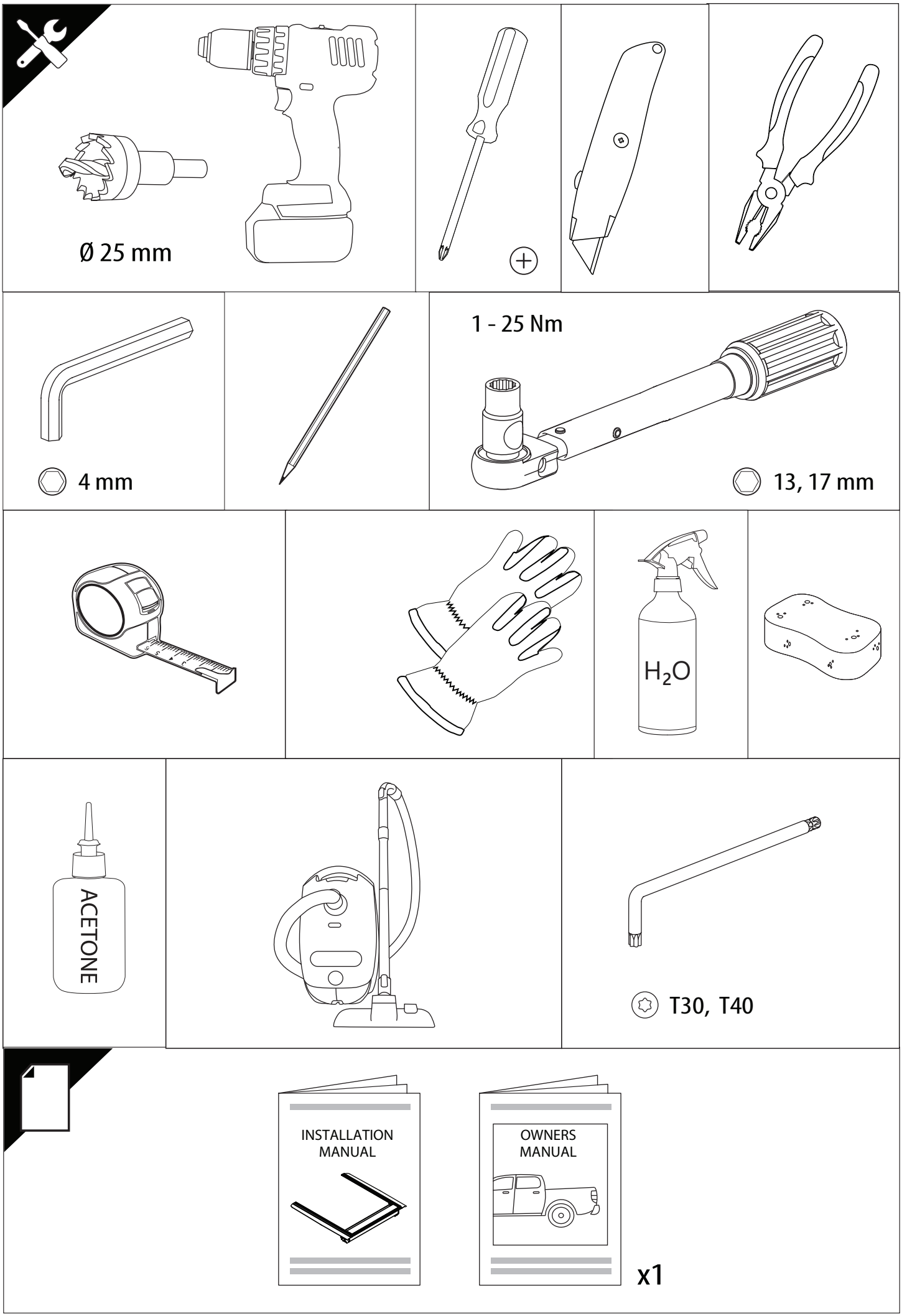
Ø 25 mm
4 mm
1 - 25 Nm
13, 17 mm
H2O
ACETONE
T30, T40
INSTALLATION MANUAL
OWNERS MANUAL
x1

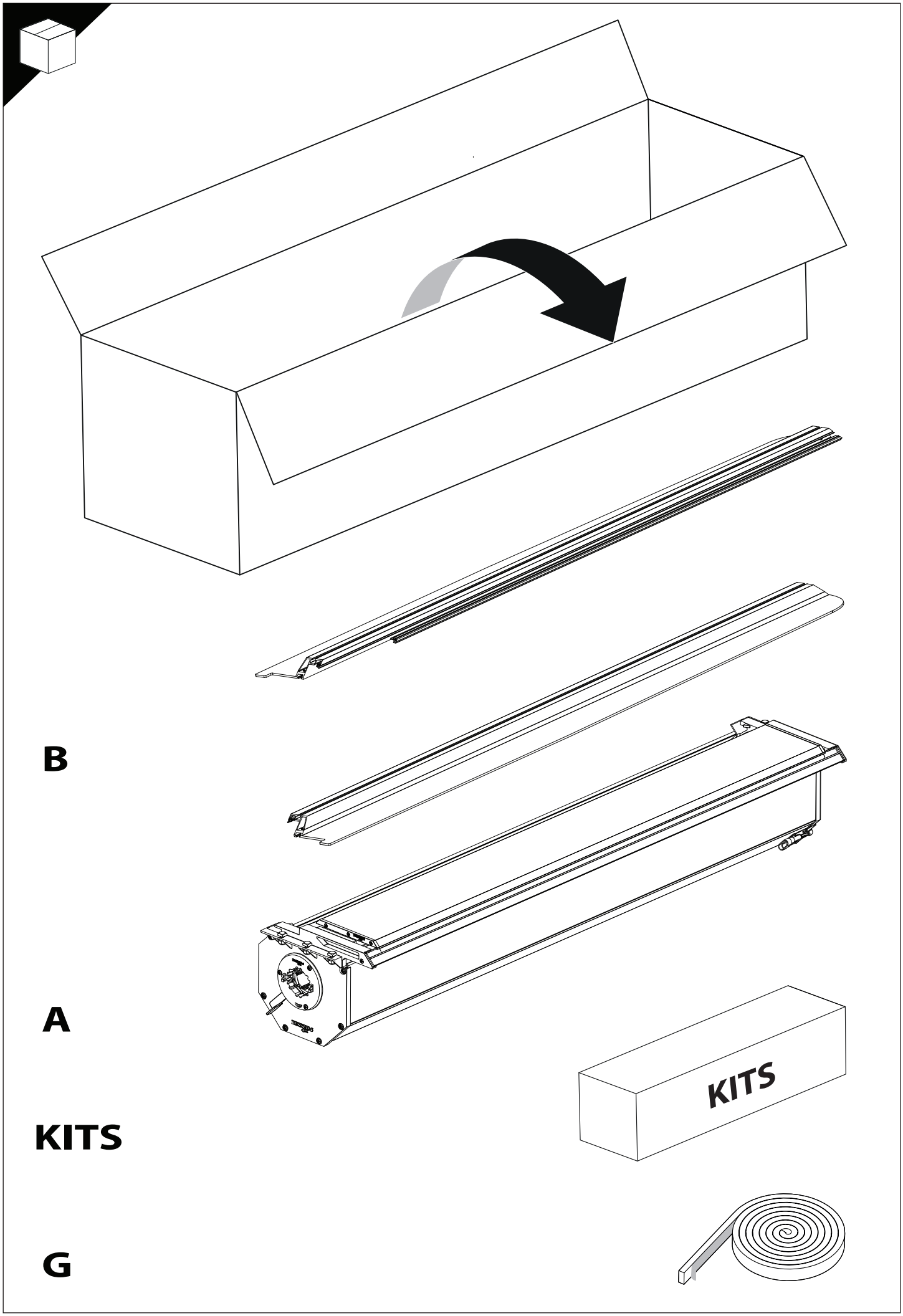
B
A
KITS
KITS
G

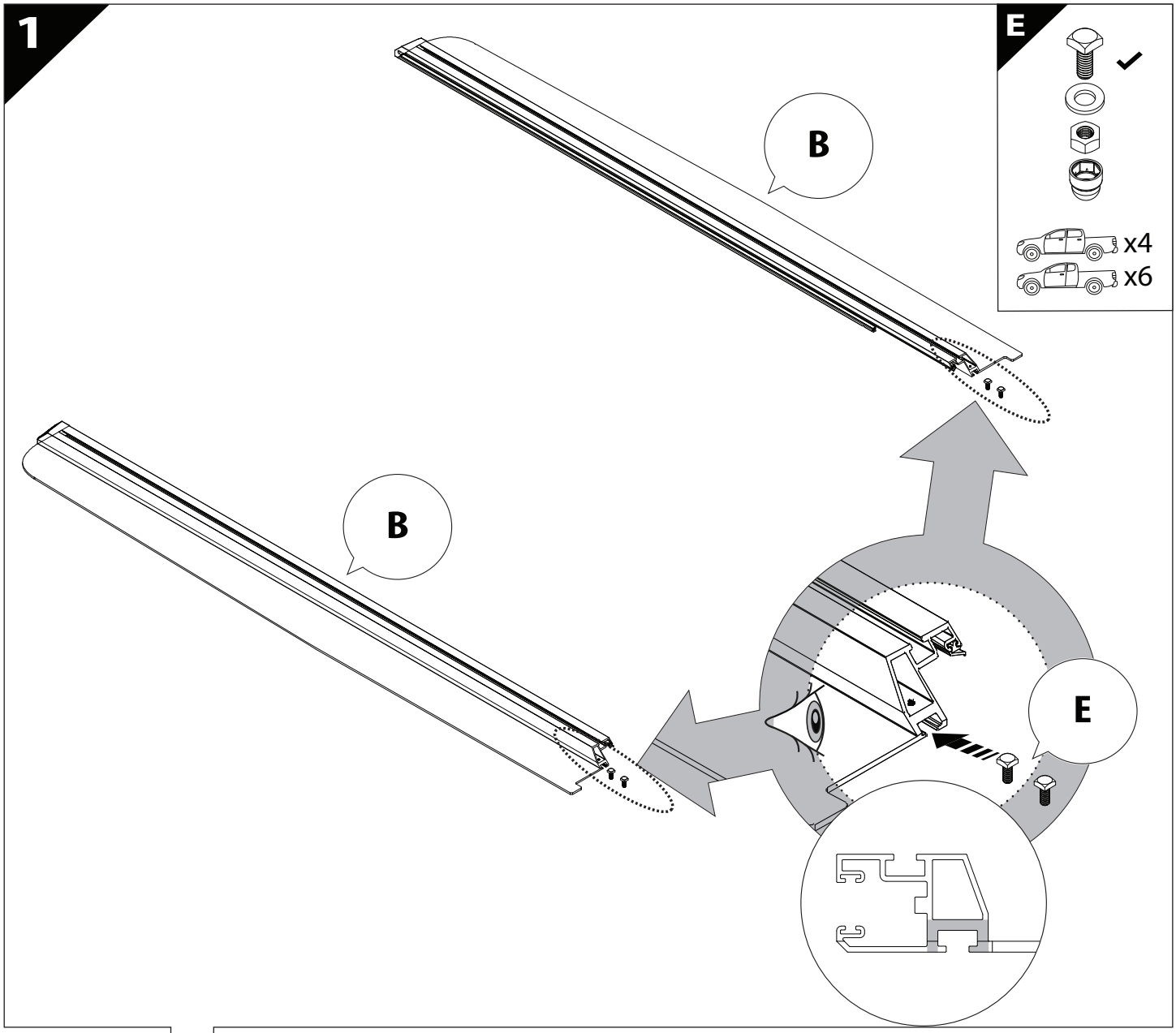
1
E
x4
x6
B
B
E

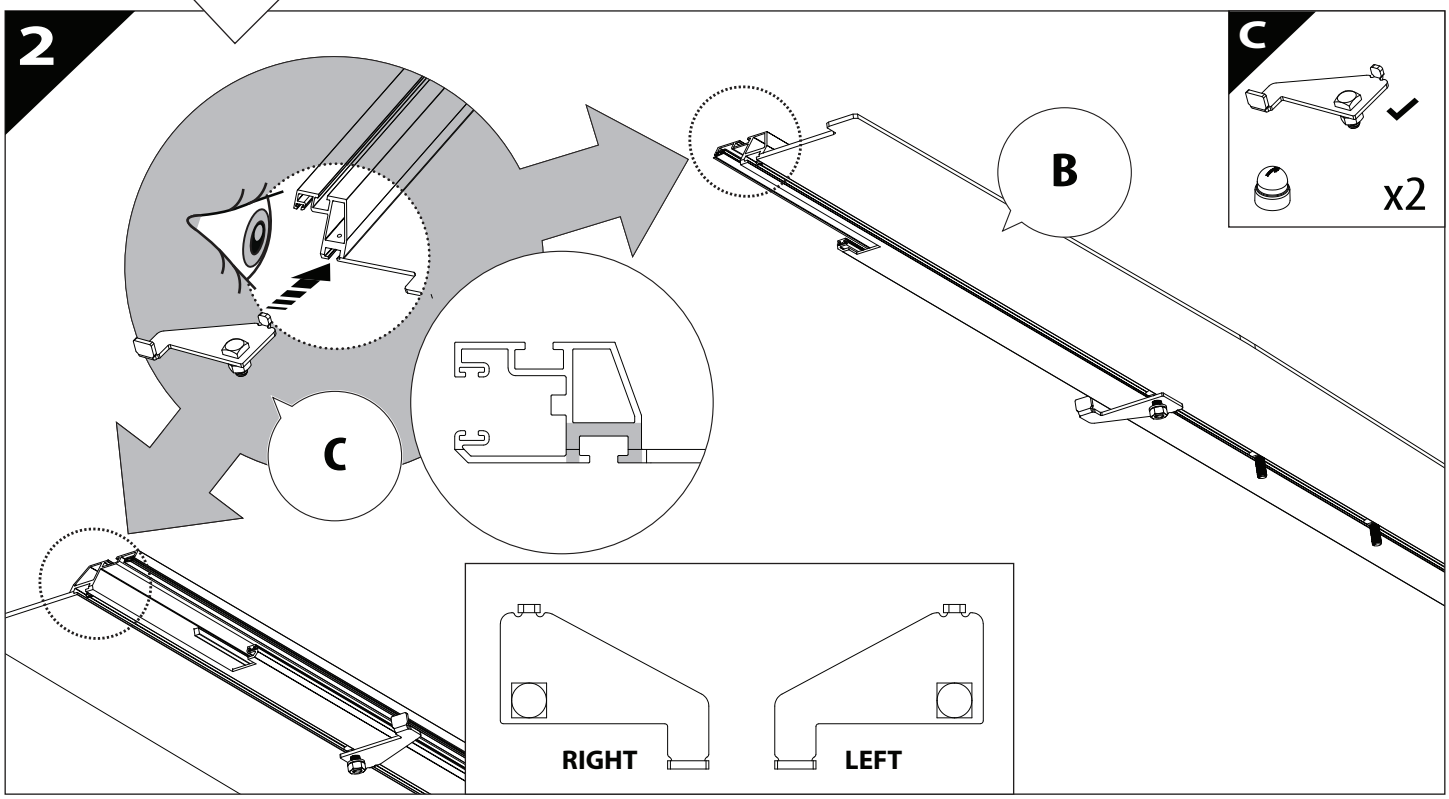
2
C
x2
B
C
RIGHT
LEFT

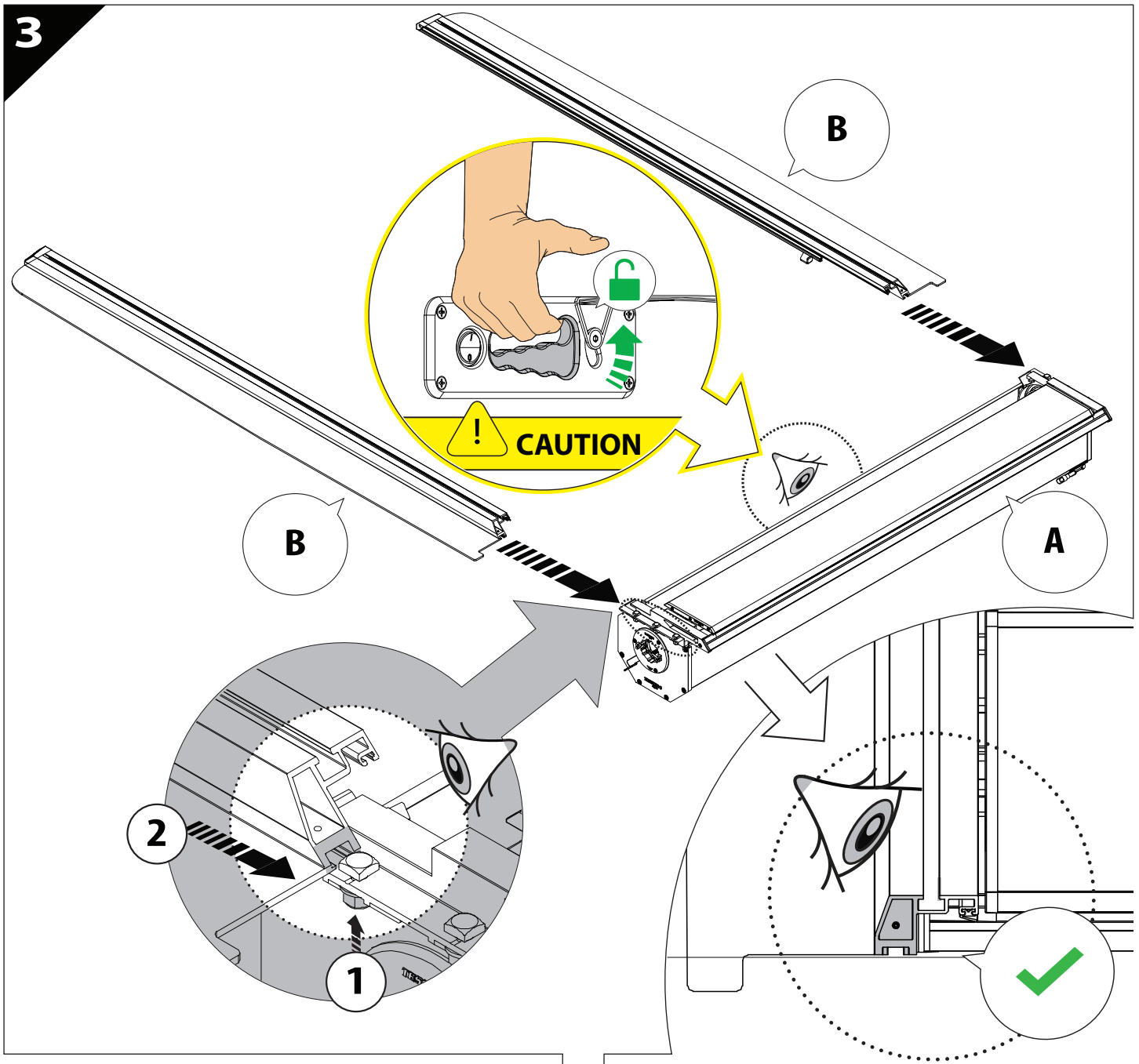
3
B
B
A
CAUTION
2
1

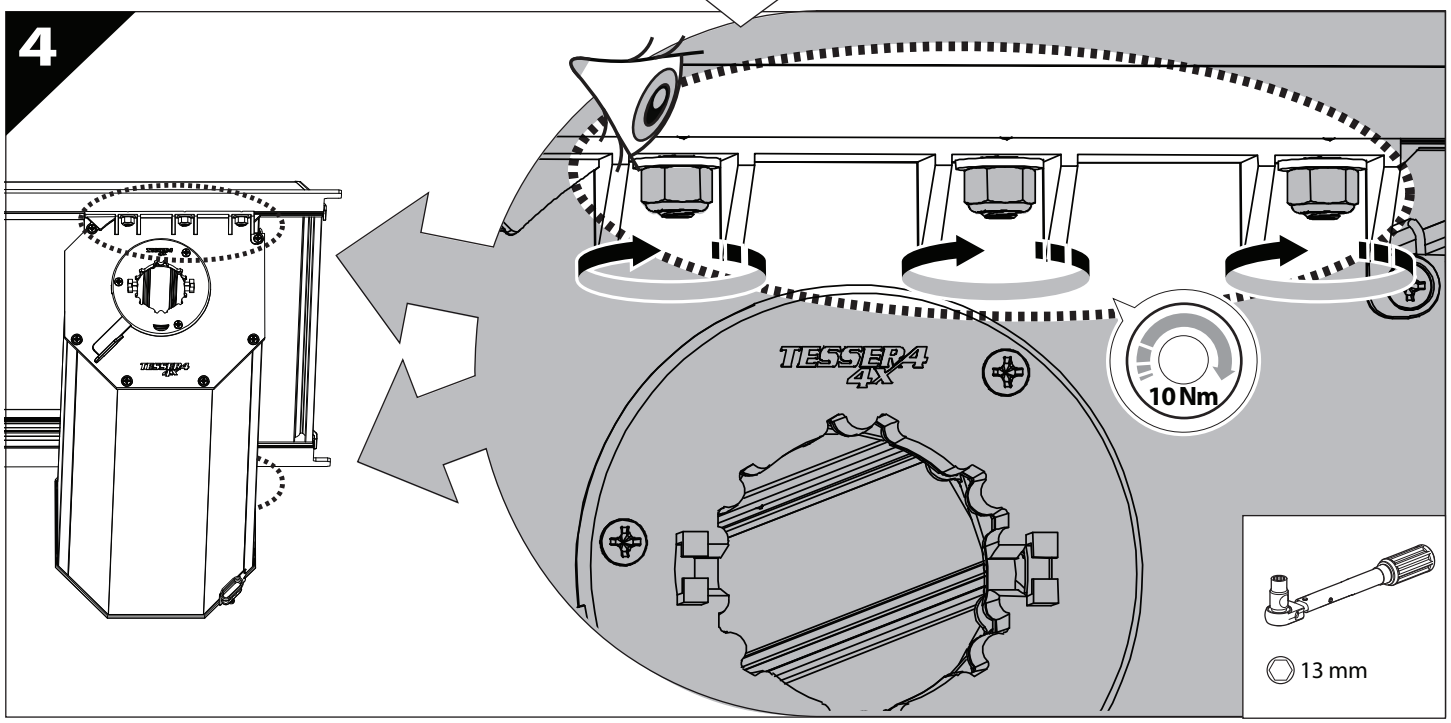
4
TESSERA 4X
10 Nm
13 mm

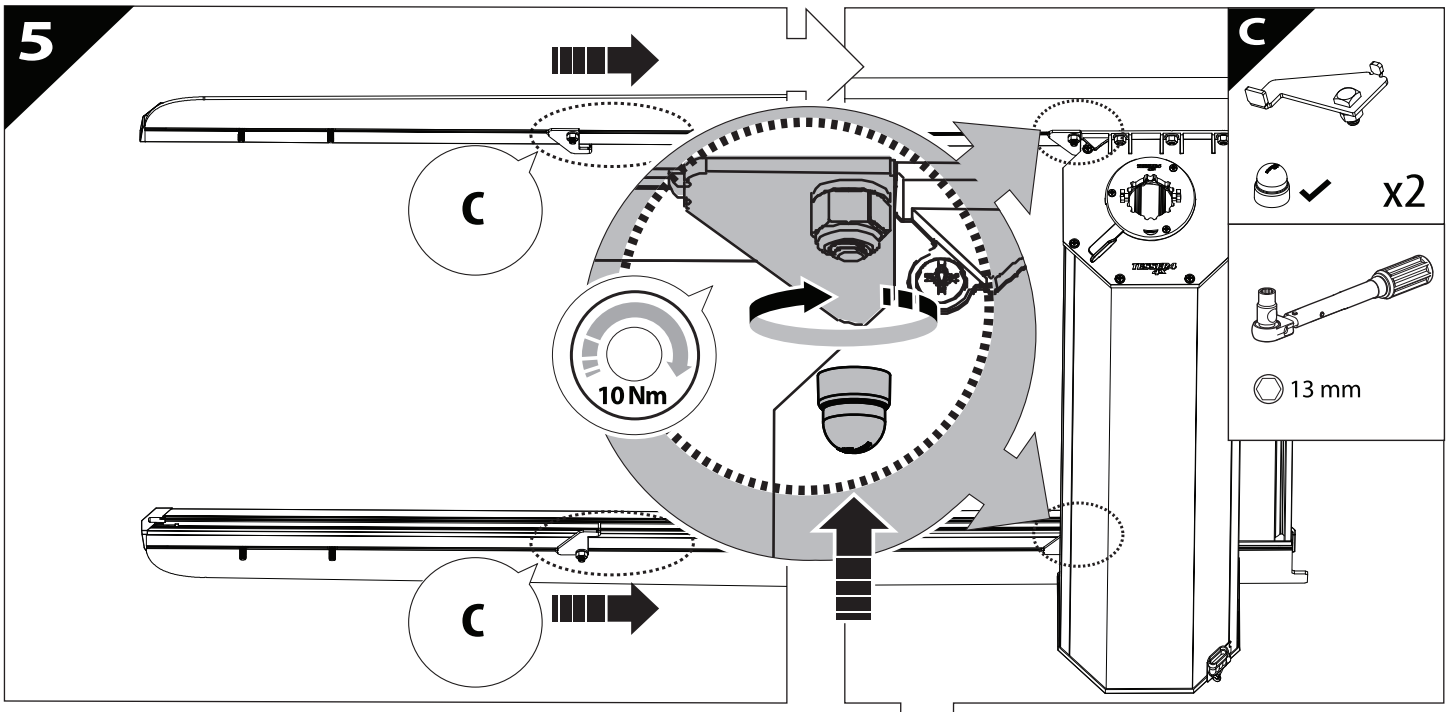
5
C
C
10 Nm
C
x2
13 mm

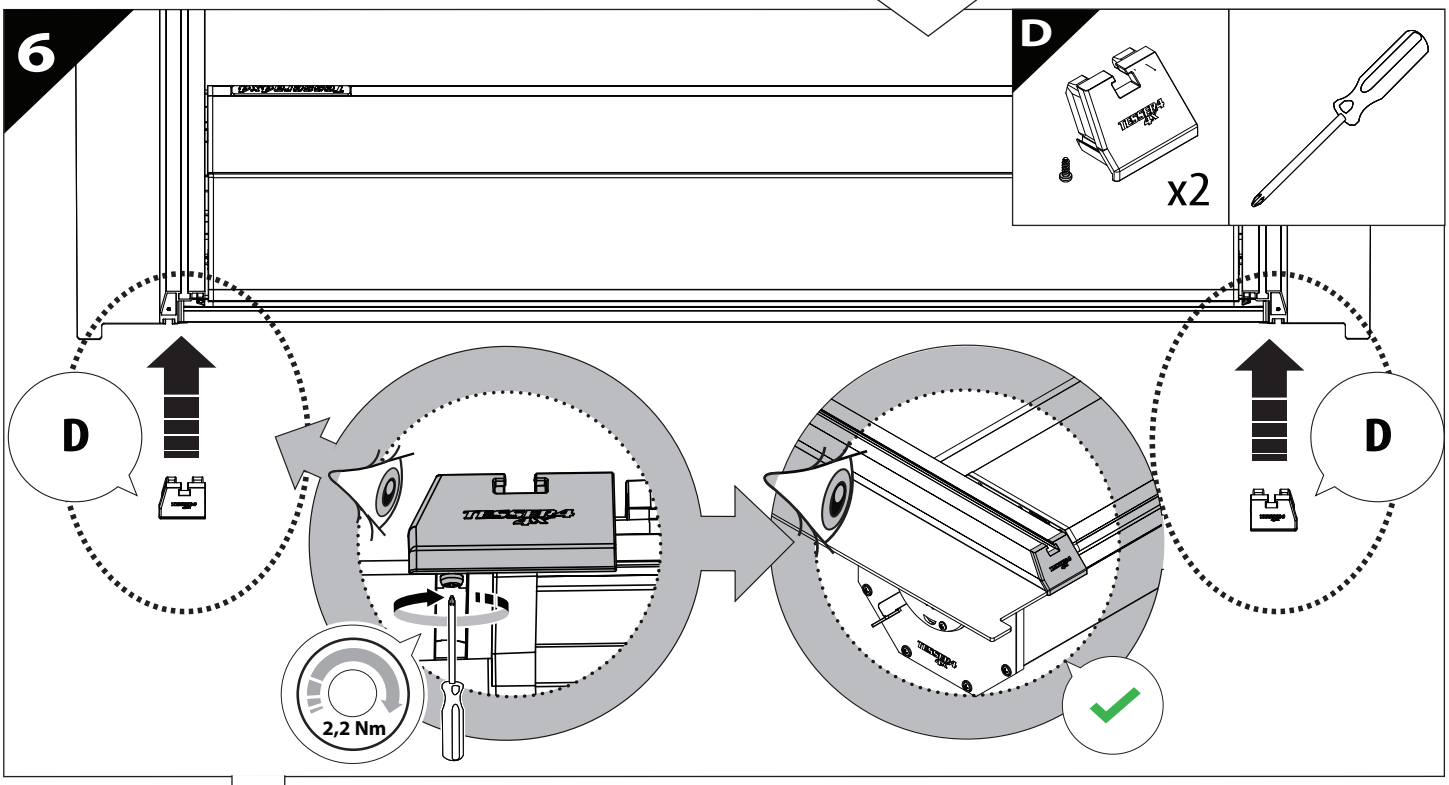
6
D
x2
D
D
2,2 Nm

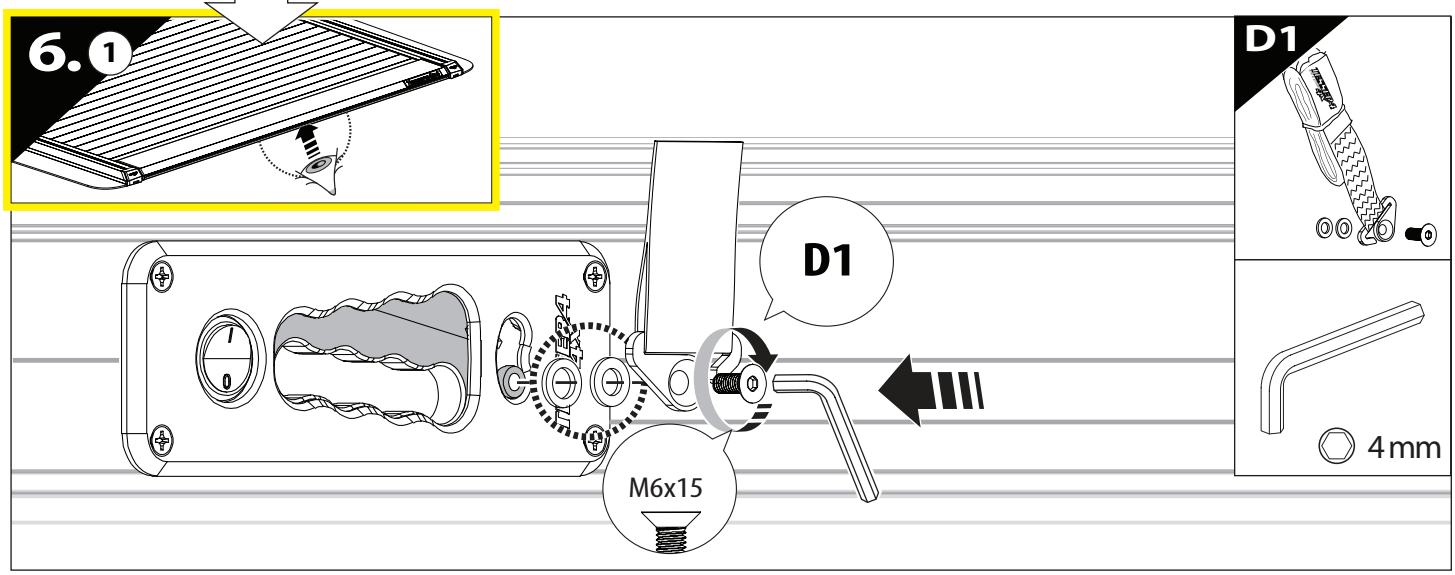
6. 1
D1
D1
M6x15
4 mm

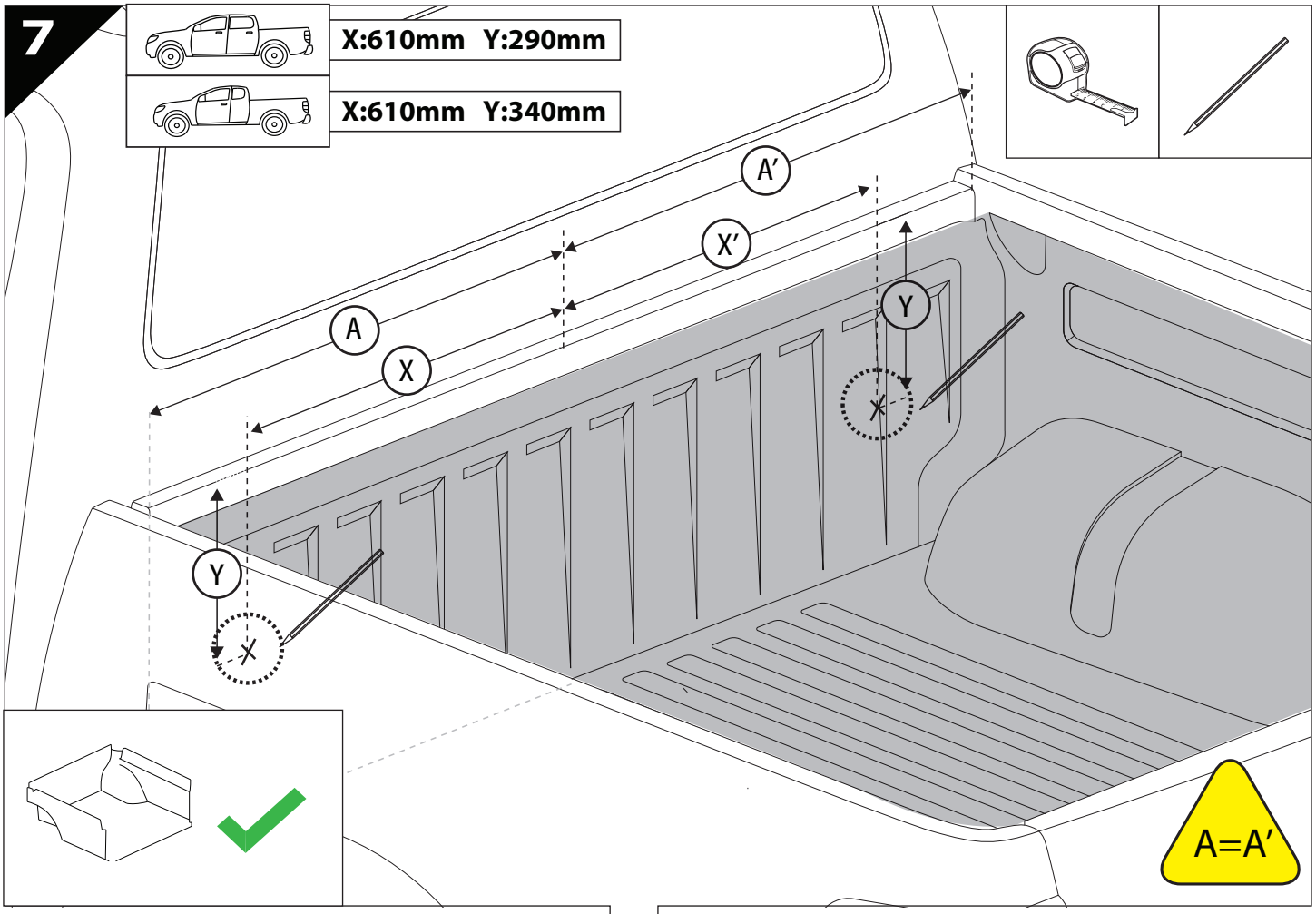
7
X:610mm Y:290mm
X:610mm Y:340mm
A'
X'
A
X
Y
Y
A=A'

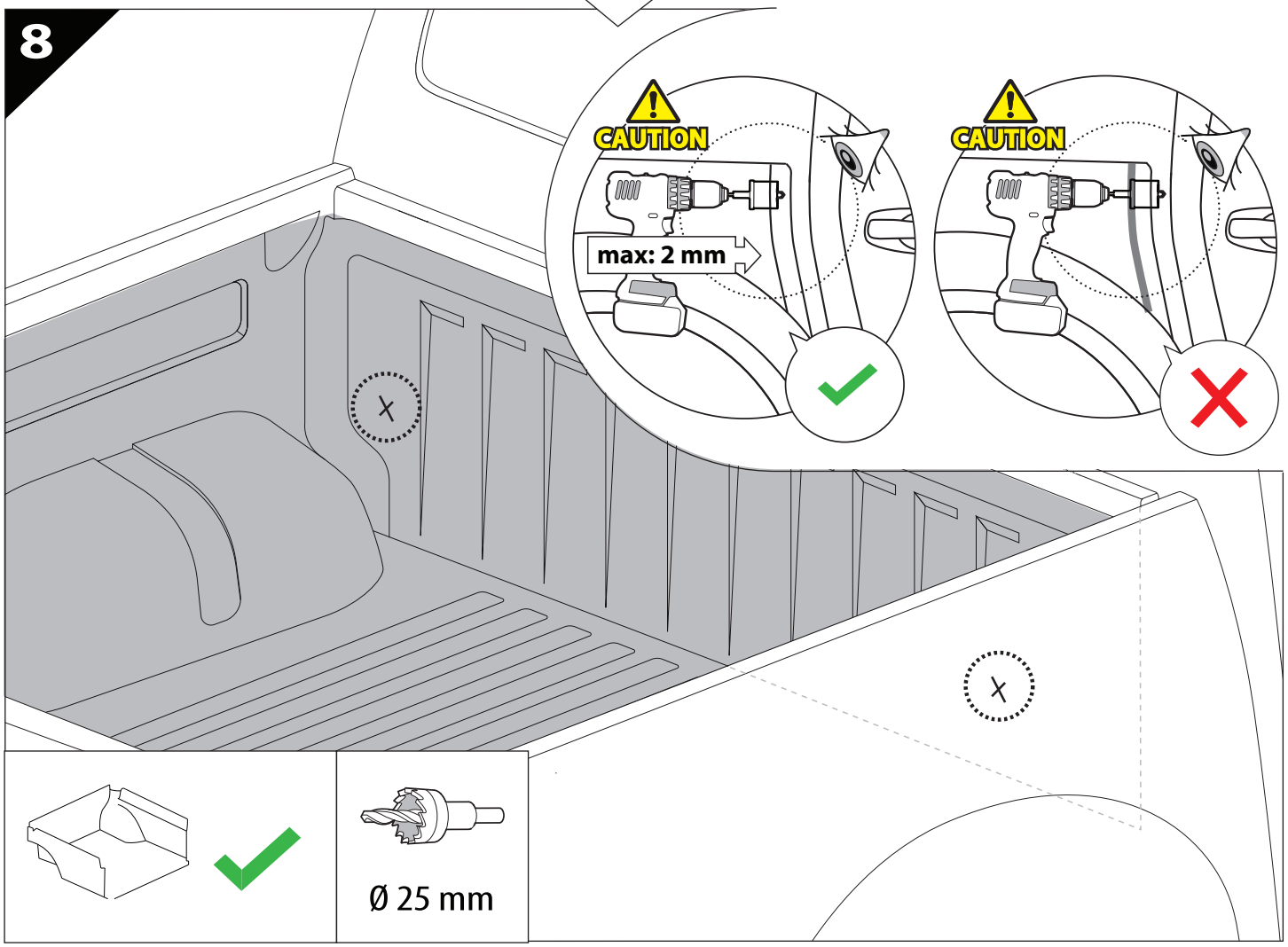
8
CAUTION
max: 2 mm
CAUTION
Ø 25 mm

9 CAUTION: ONLY FOR SE+

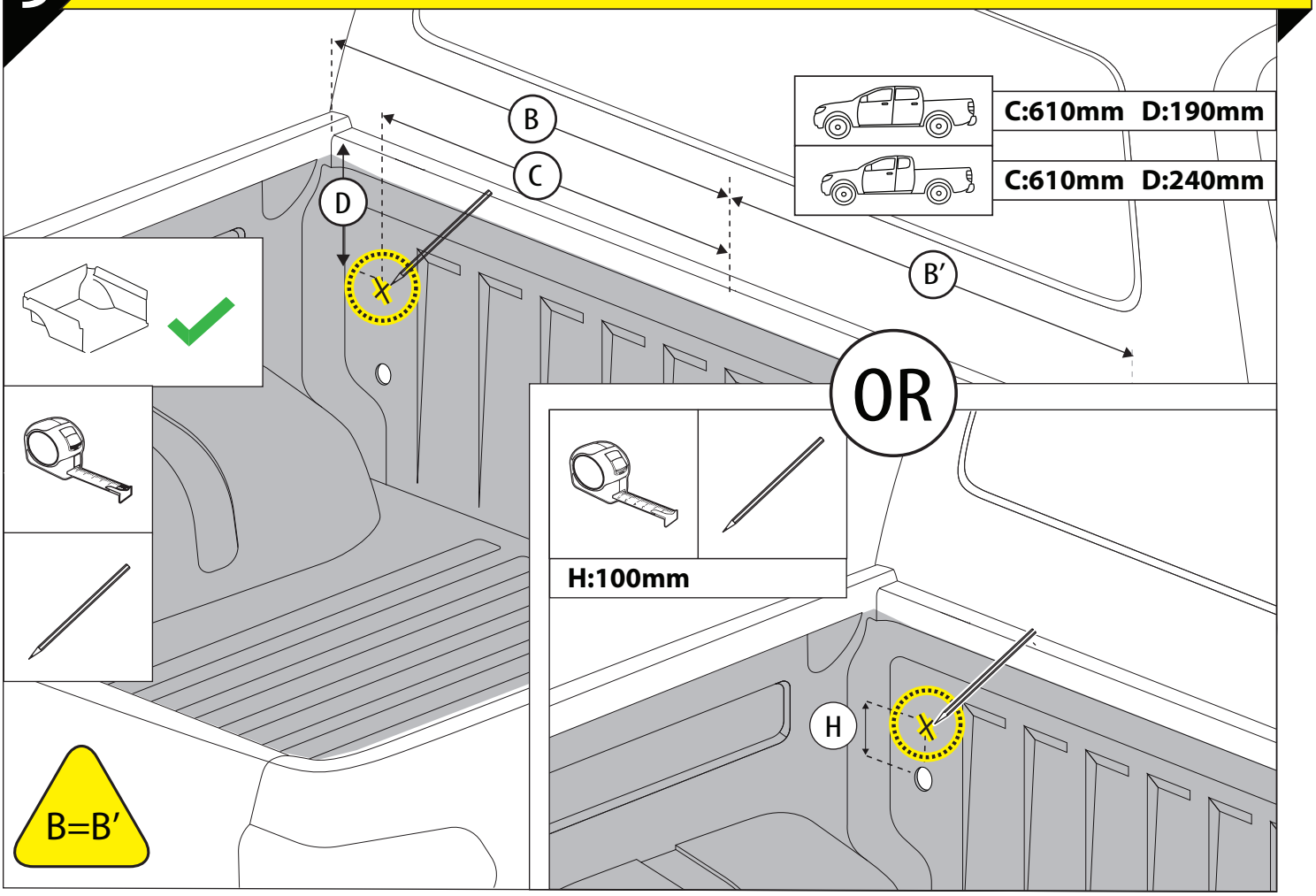

10 CAUTION: ONLY FOR SE+

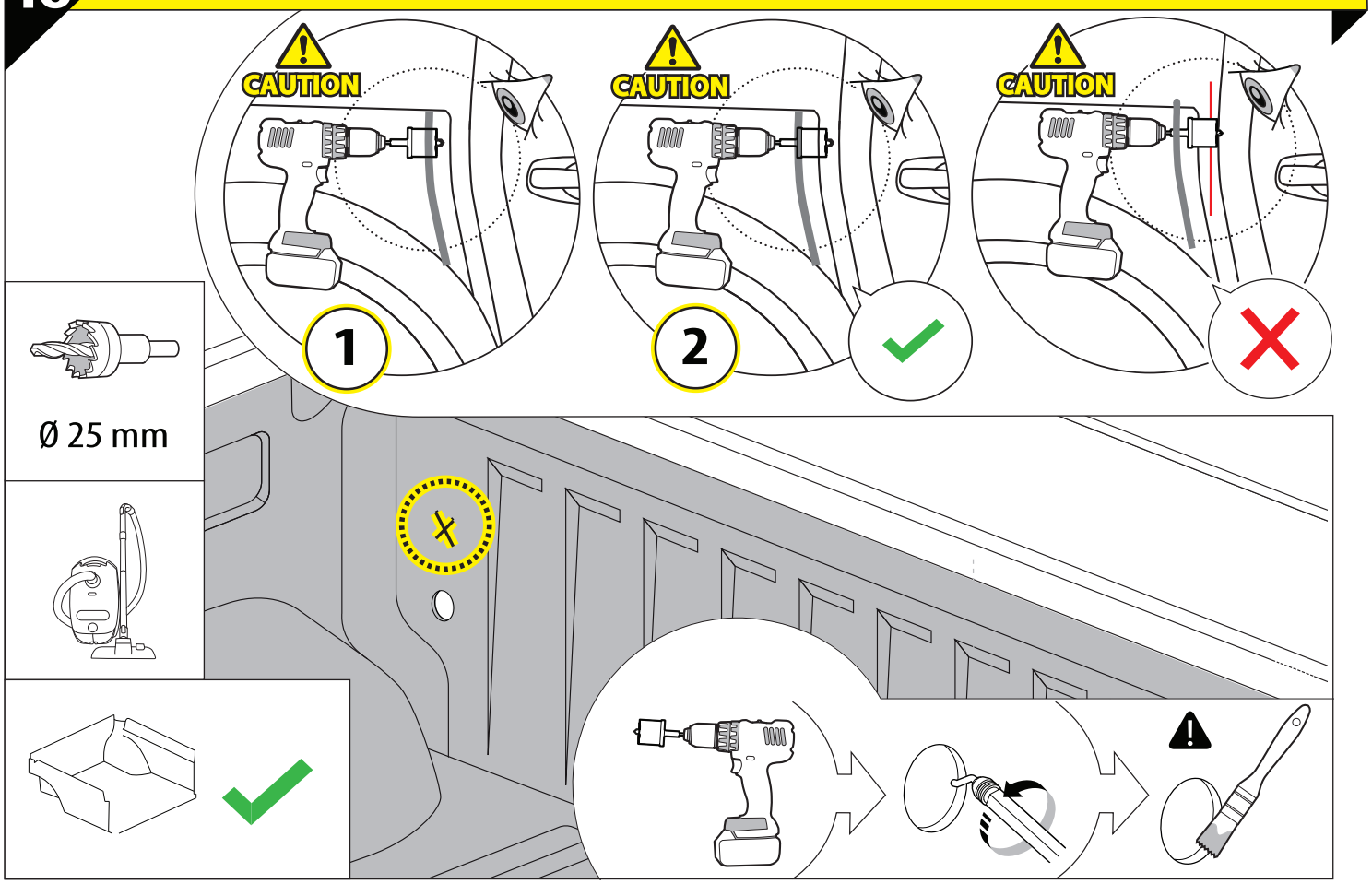

11

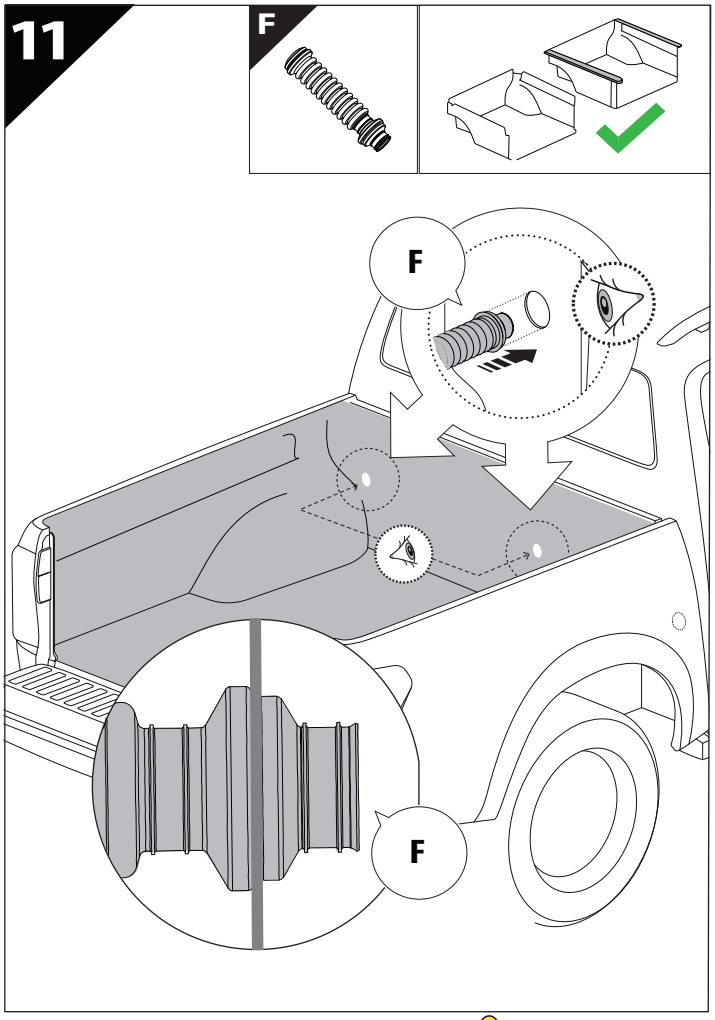

12

CAUTION: ONLY FOR SE+

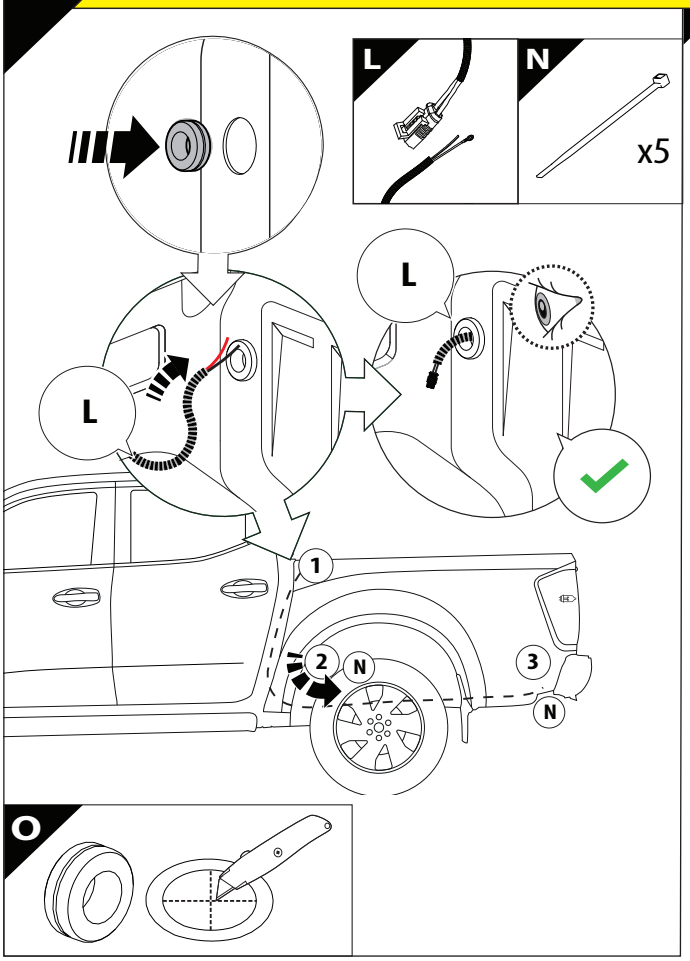

13

CAUTION: ONLY FOR SE+

CAUTION: LIMITED, WILDTRAK, WILDTRAK X, PLATINUM

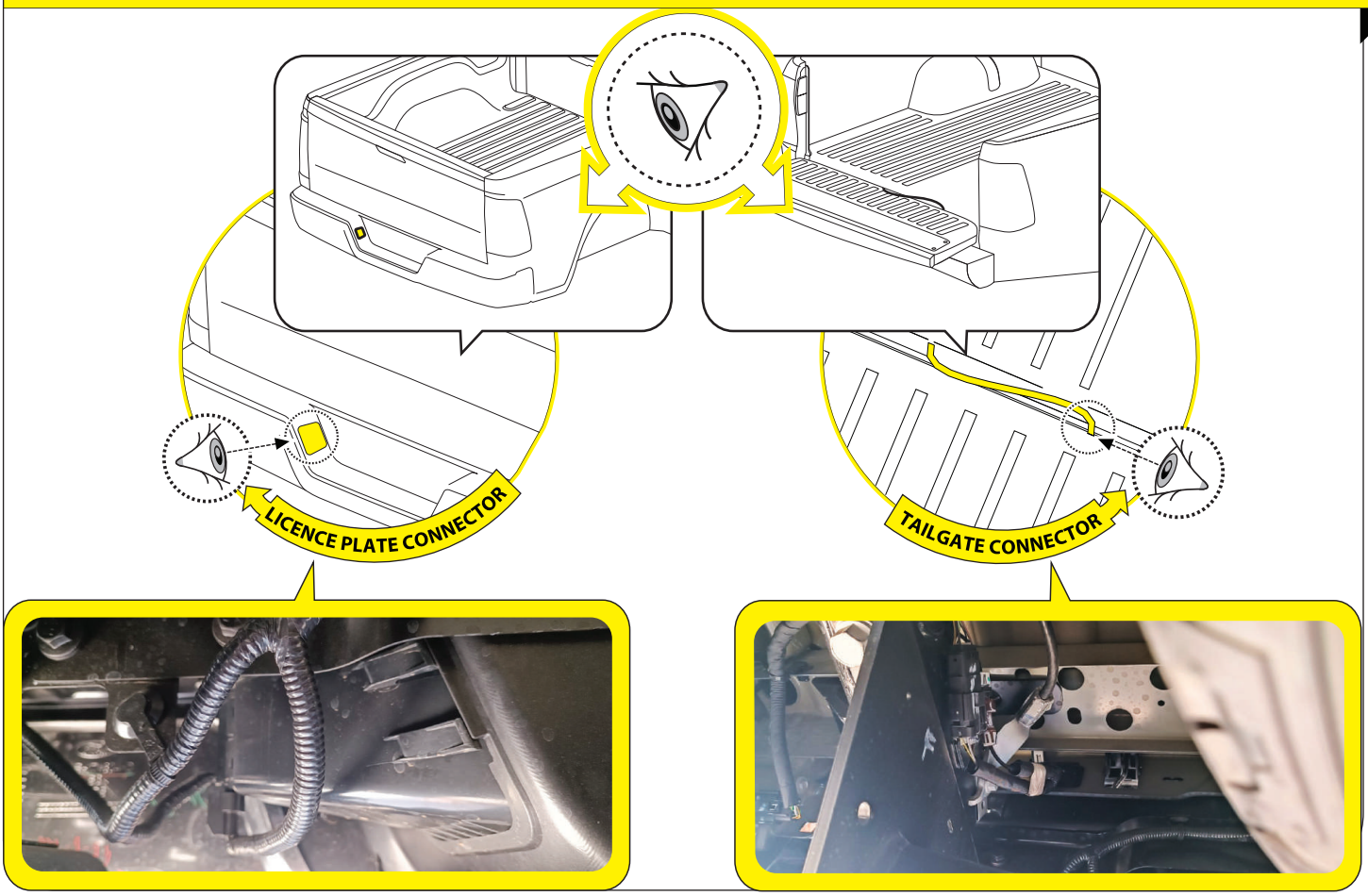

14

CAUTION: ONLY FOR SE+

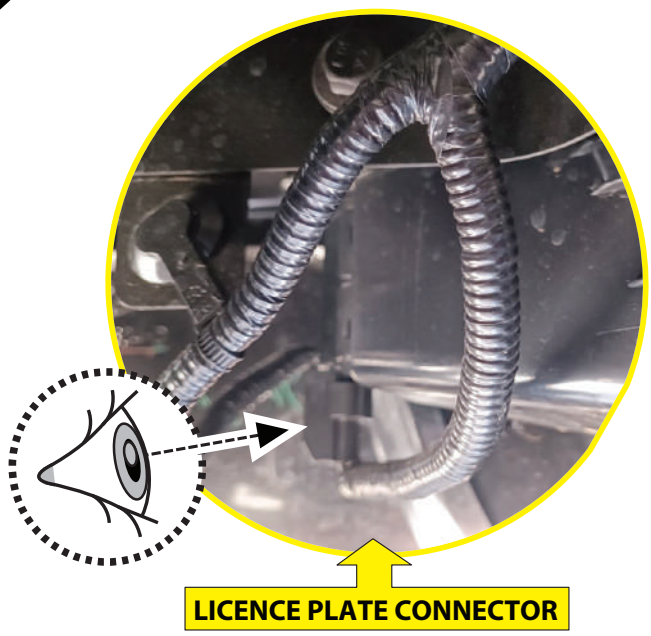

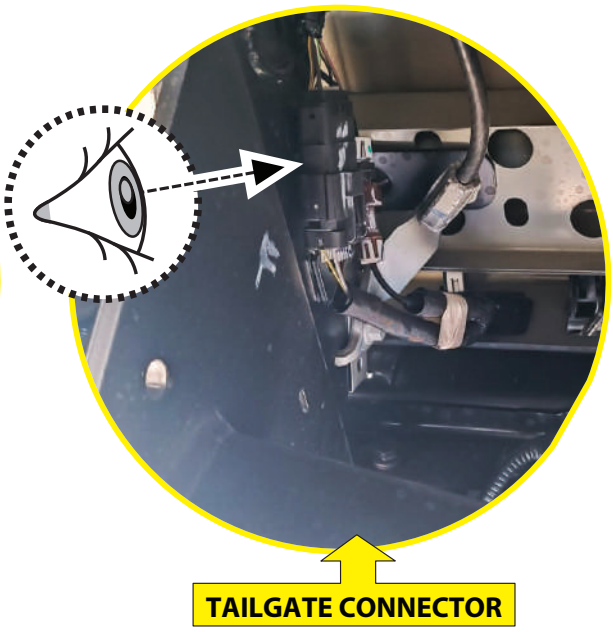

15

BOTTOM VIEW

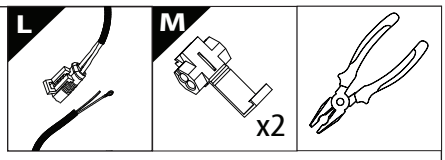

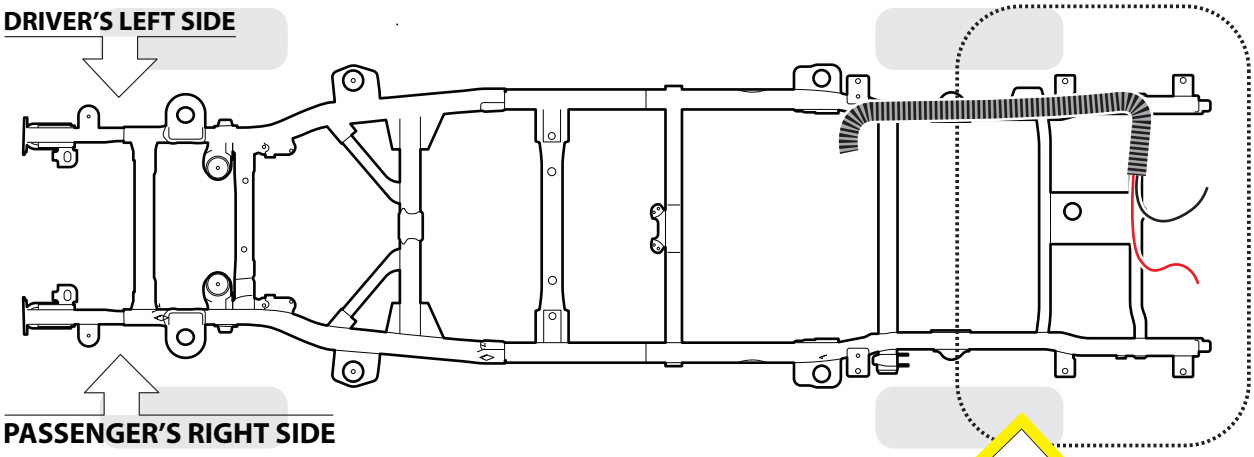

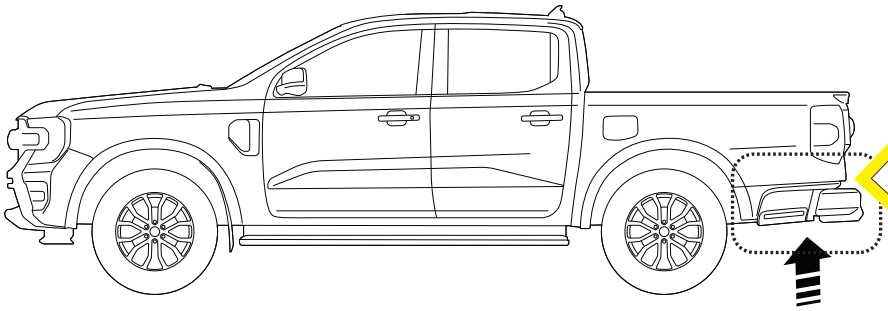

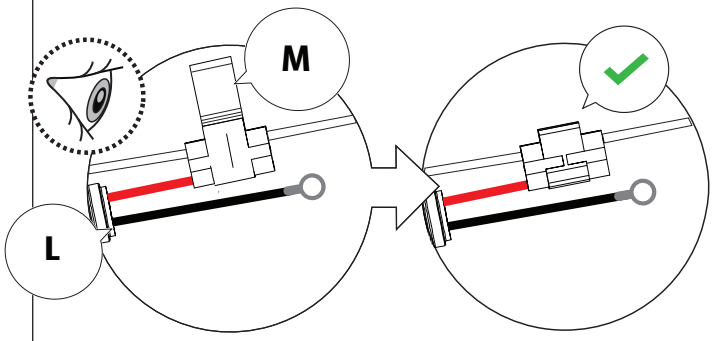

CAR		TESSERA ROLL+
BEAM	⟷	
LICENCE PLATE 2 PIN LIGHT CONNECTOR		
	OR	
STOP	⟷	
TAILGATE CONNECTOR		

16

CAUTION: ONLY FOR SE+

CAUTION: XL, XLT, TREMOR

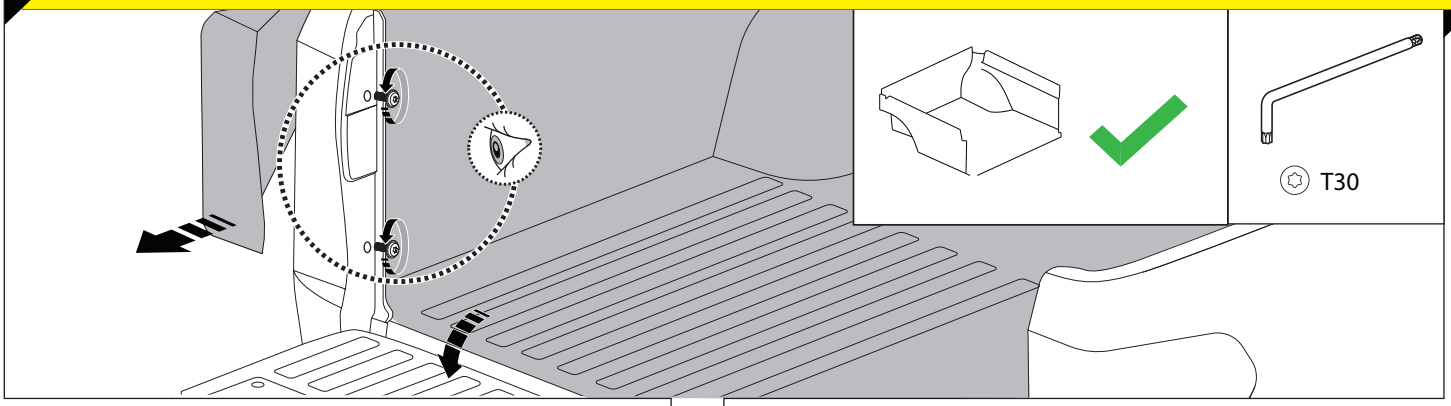

16.1

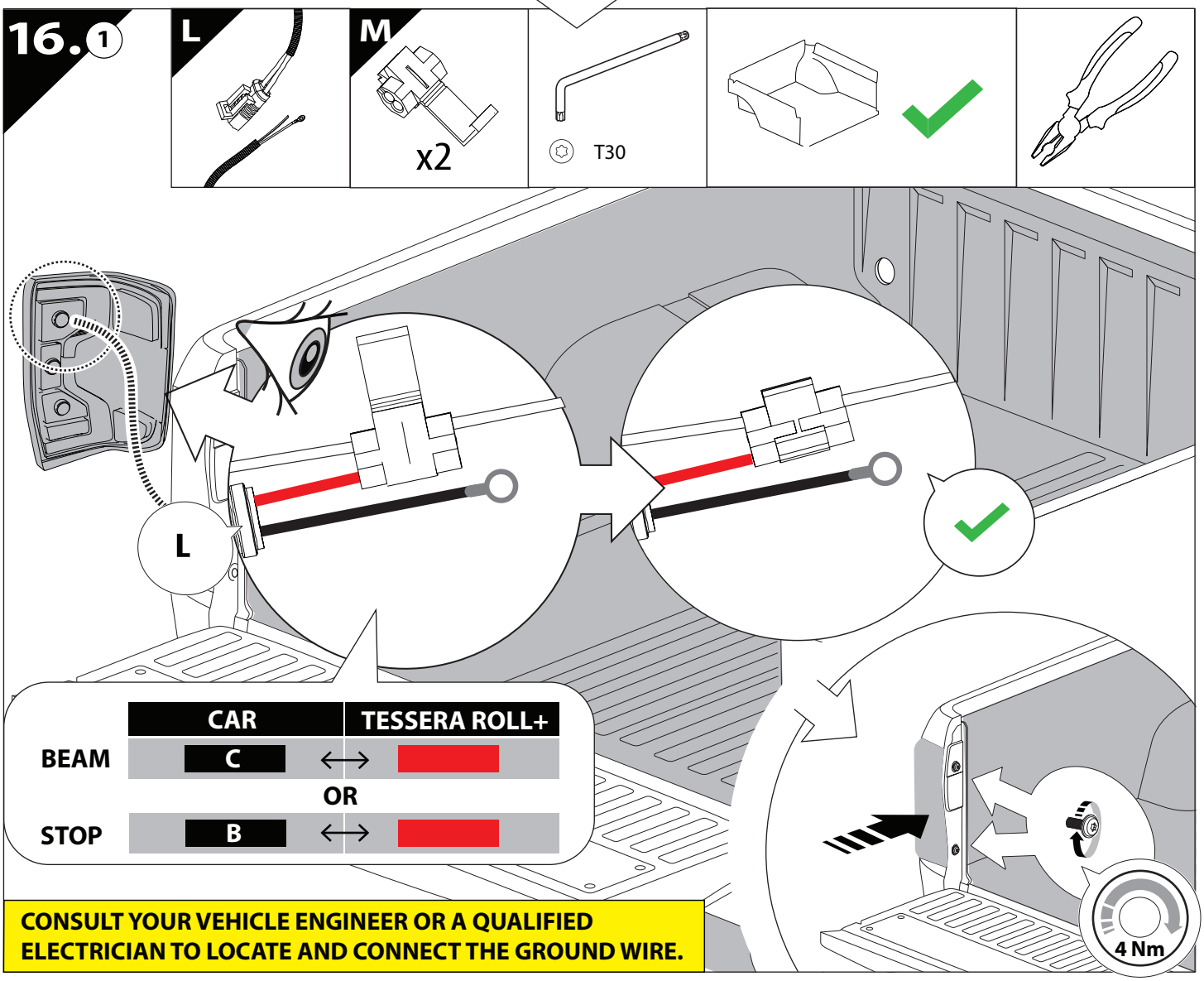

	CAR		TESSERA ROLL+
BEAM	C	⟷	
		OR	
STOP	B	⟷	

CONSULT YOUR VEHICLE ENGINEER OR A QUALIFIED ELECTRICIAN TO LOCATE AND CONNECT THE GROUND WIRE.

17

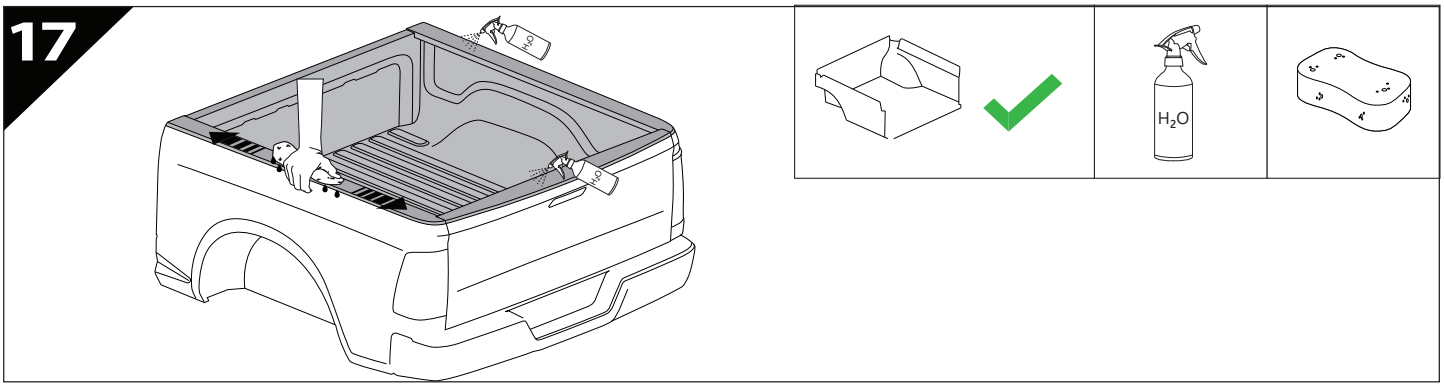

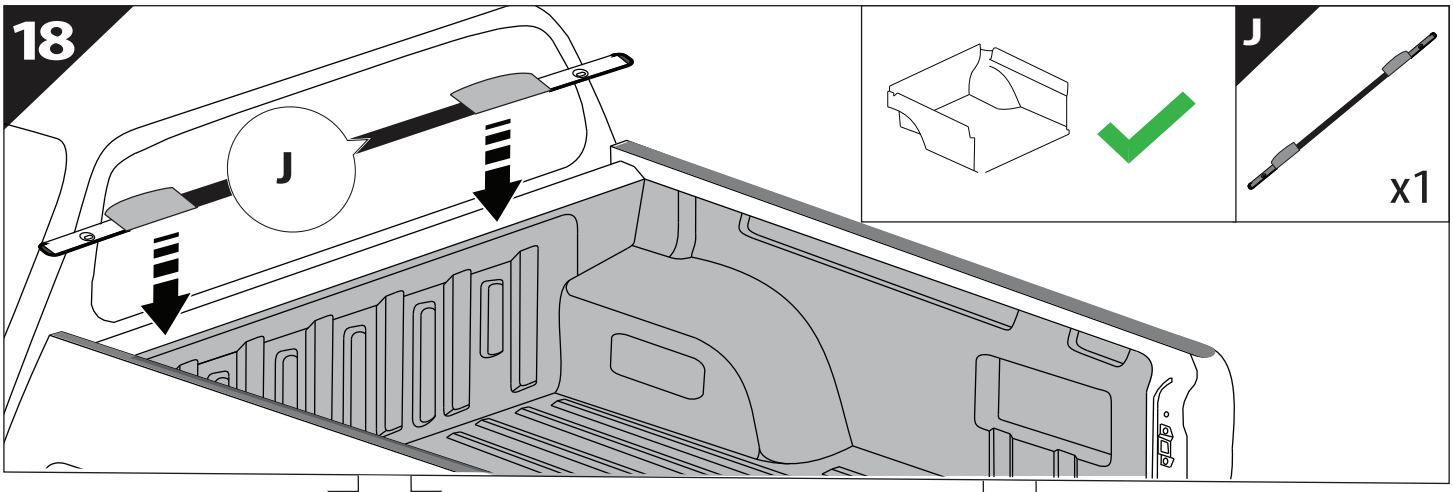
18
J
J
x1

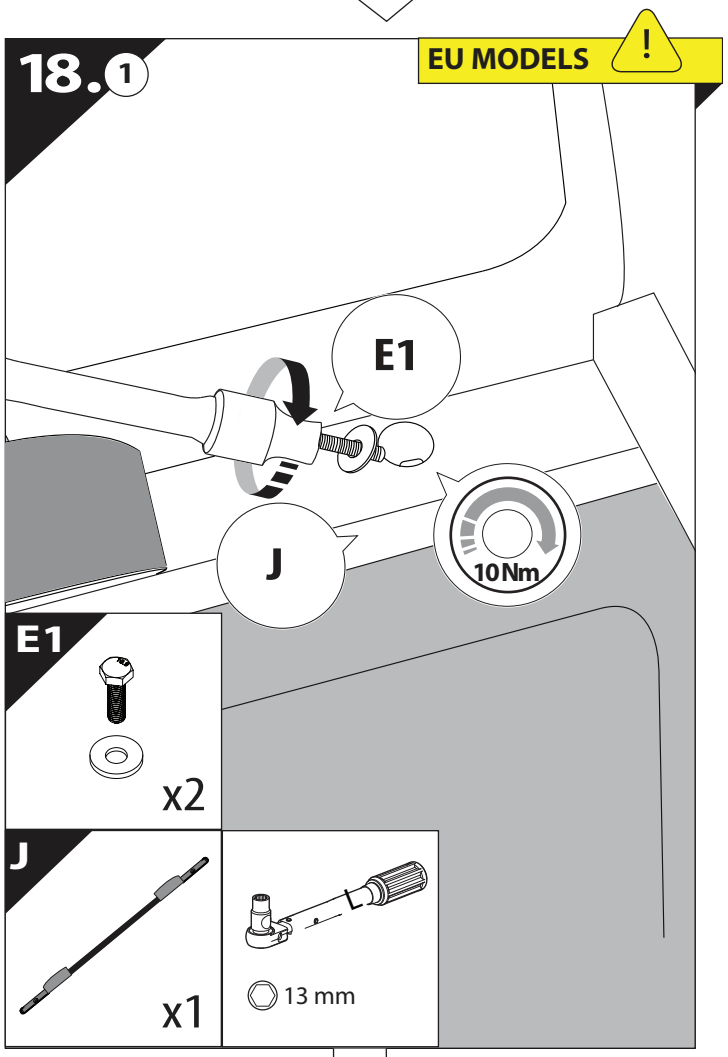
18.1
EU MODELS
!
E1
J
10 Nm
E1
x2
J
x1
13 mm

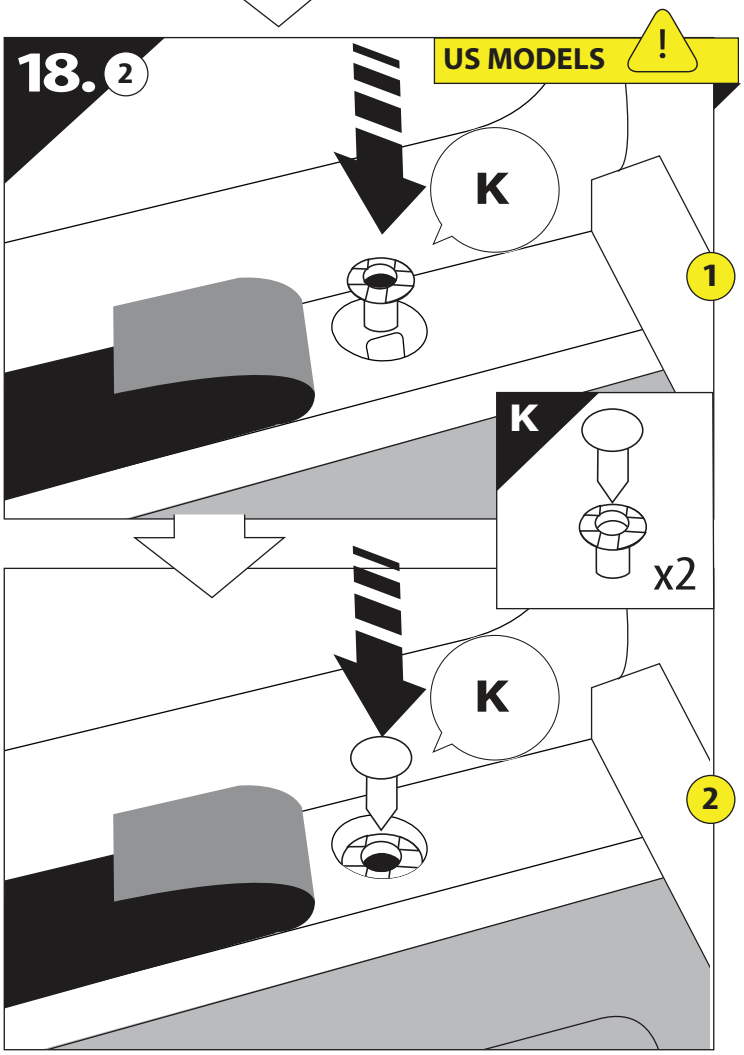
18.2
US MODELS
!
K
1
K
x2
K
2

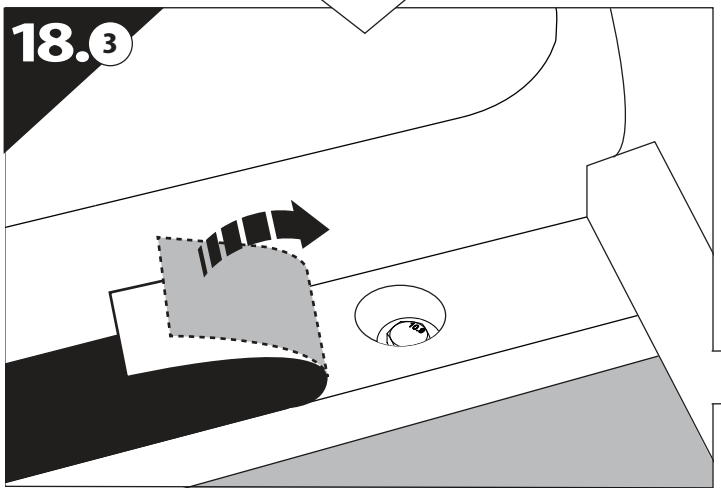
18.3

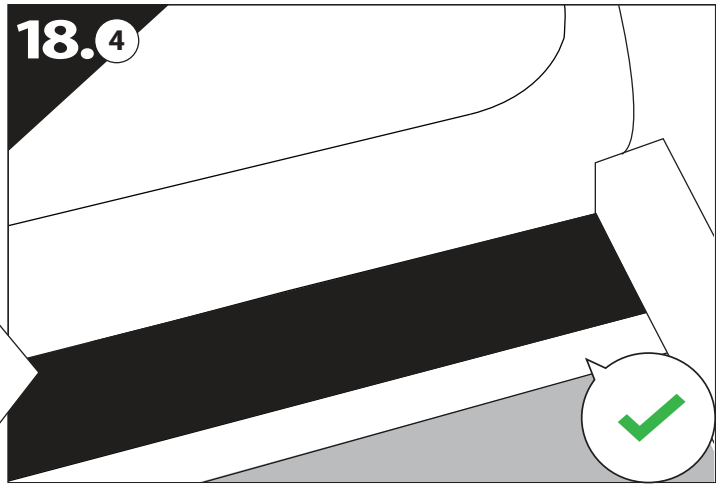
18.4

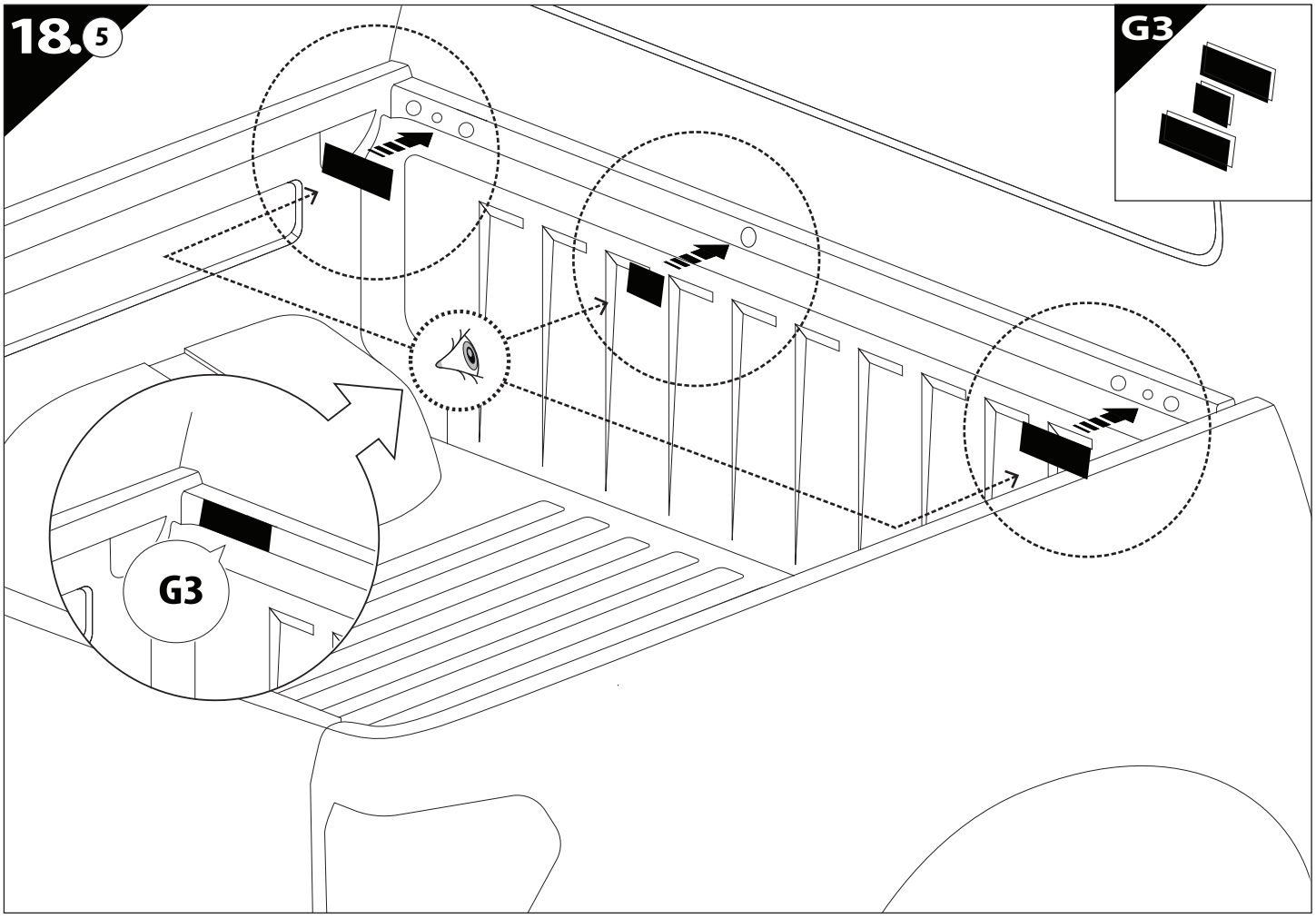
18.5
G3
G3

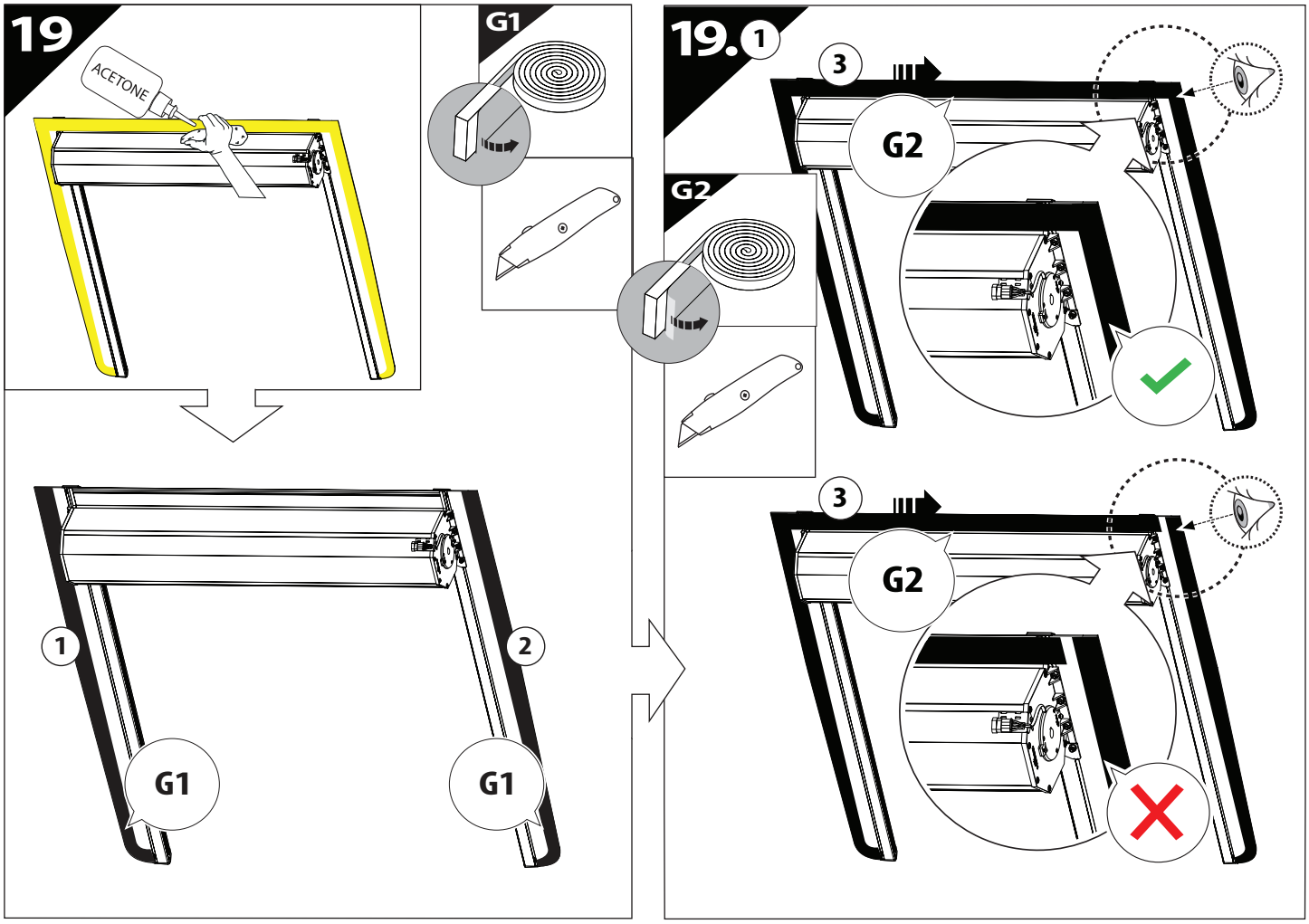
19
ACETONE
G1
1
2
G1
G1
19.1
3
G2
G2
3
G2

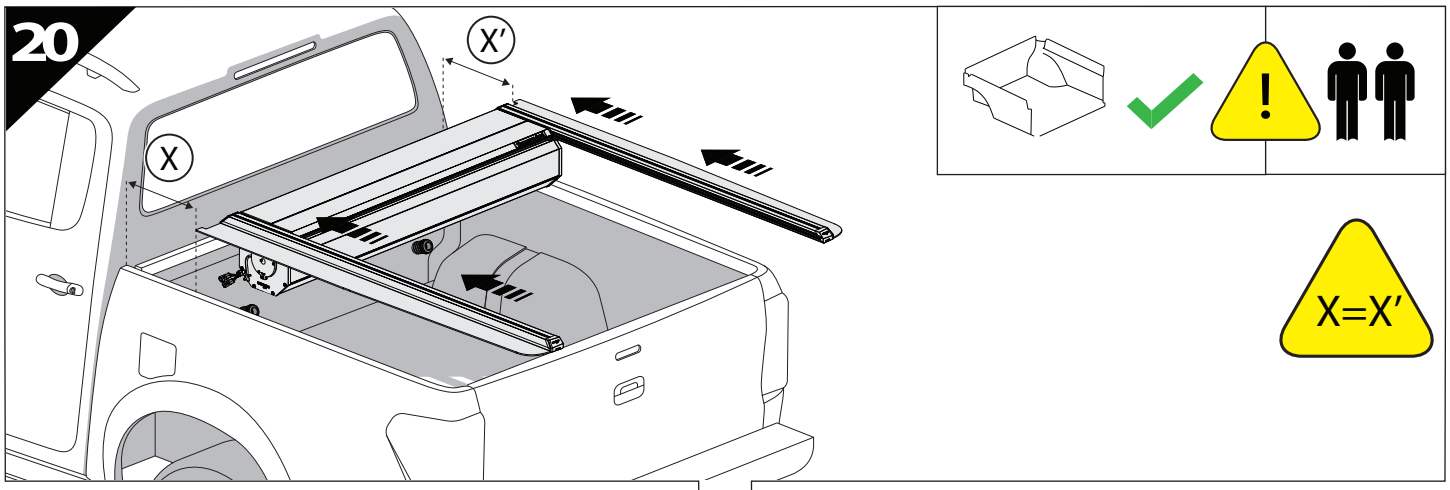
20
X
X'
X=X'

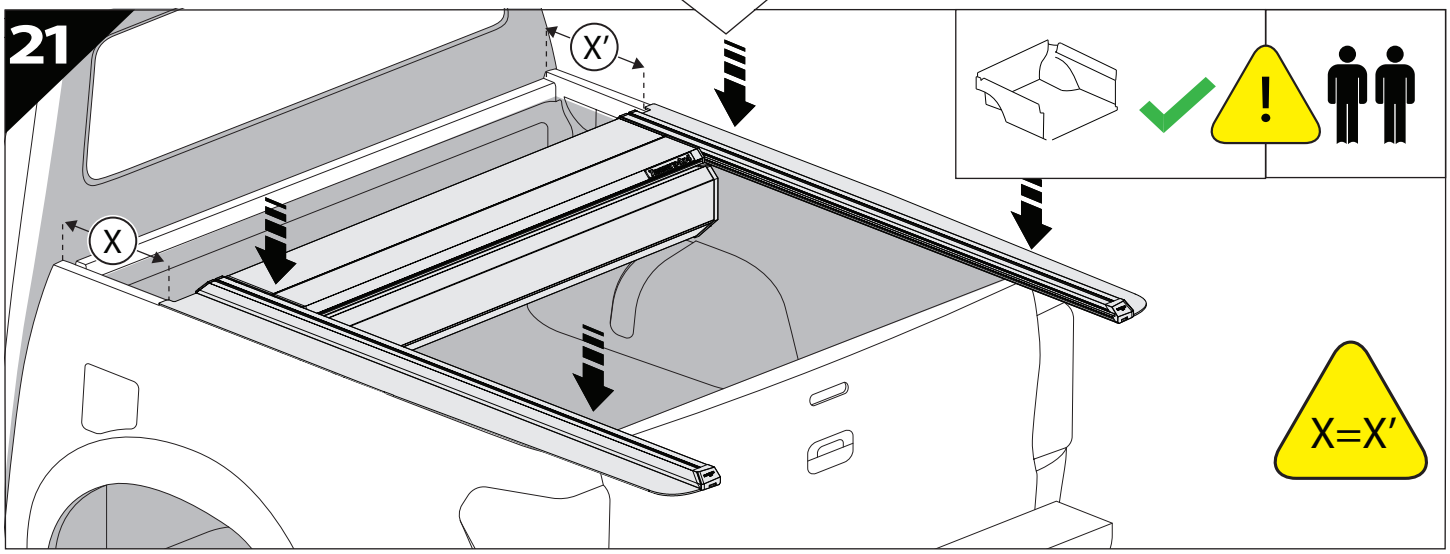
21
X
X'
X=X'

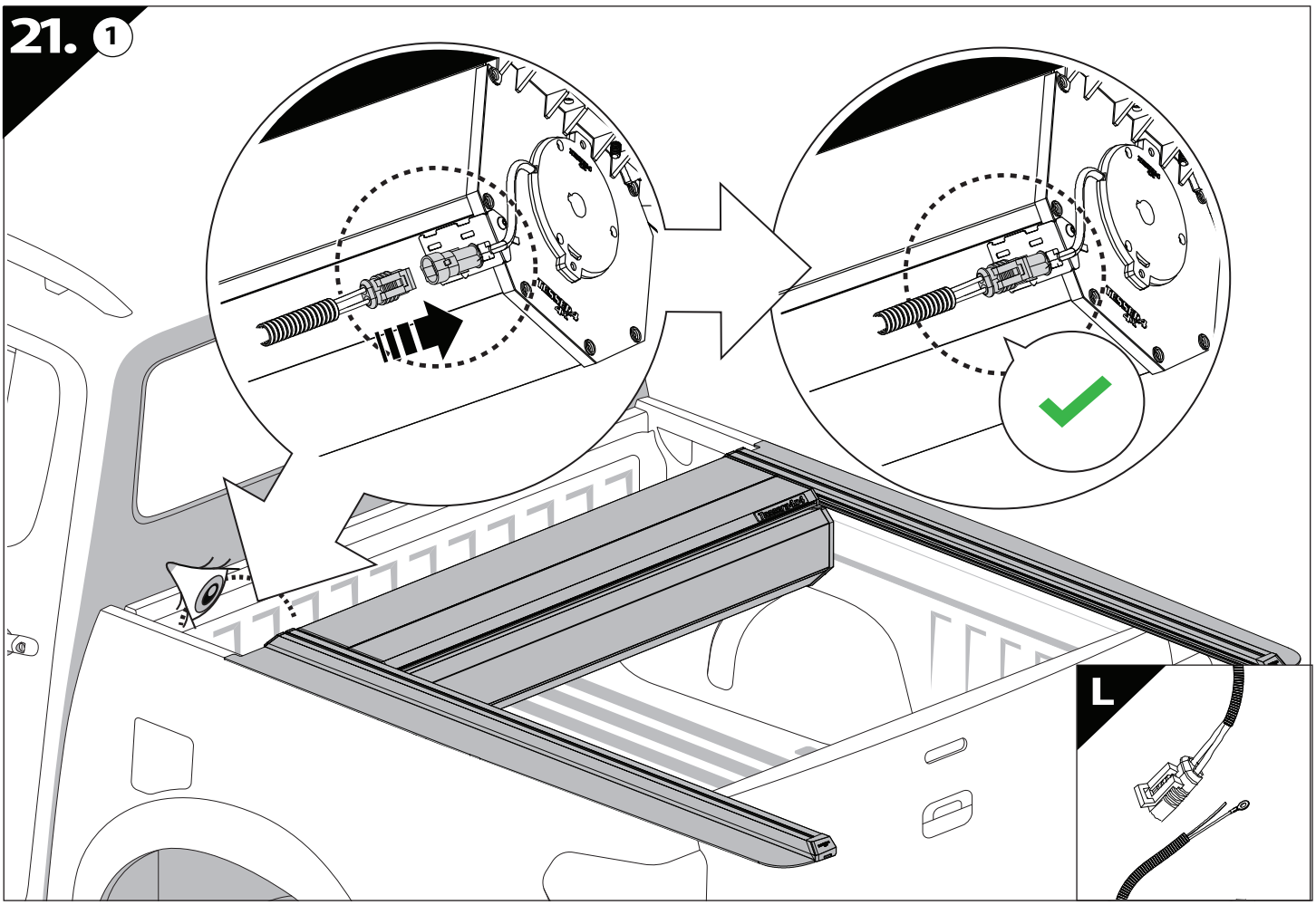
21. 1
L

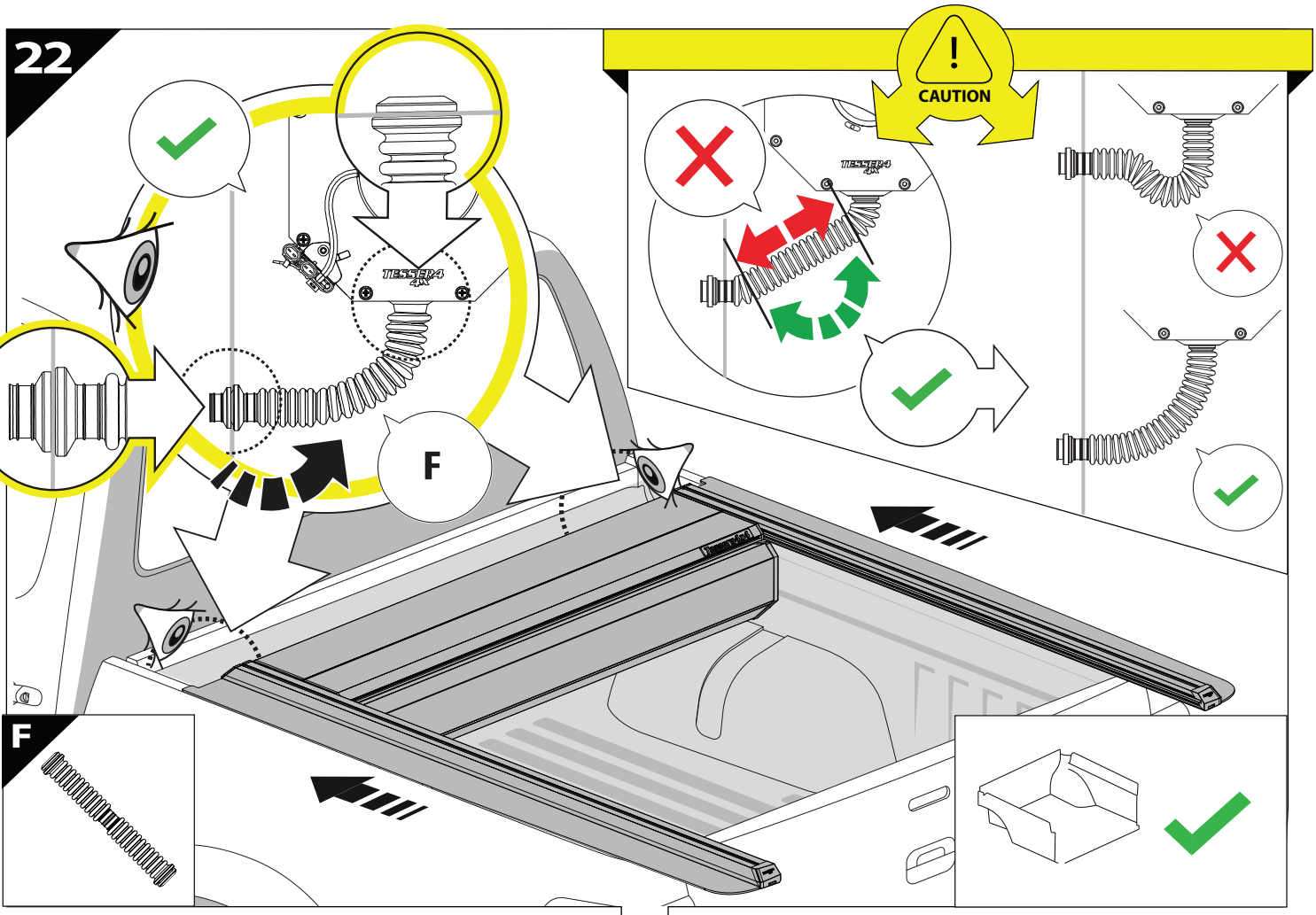
22
CAUTION
F
F

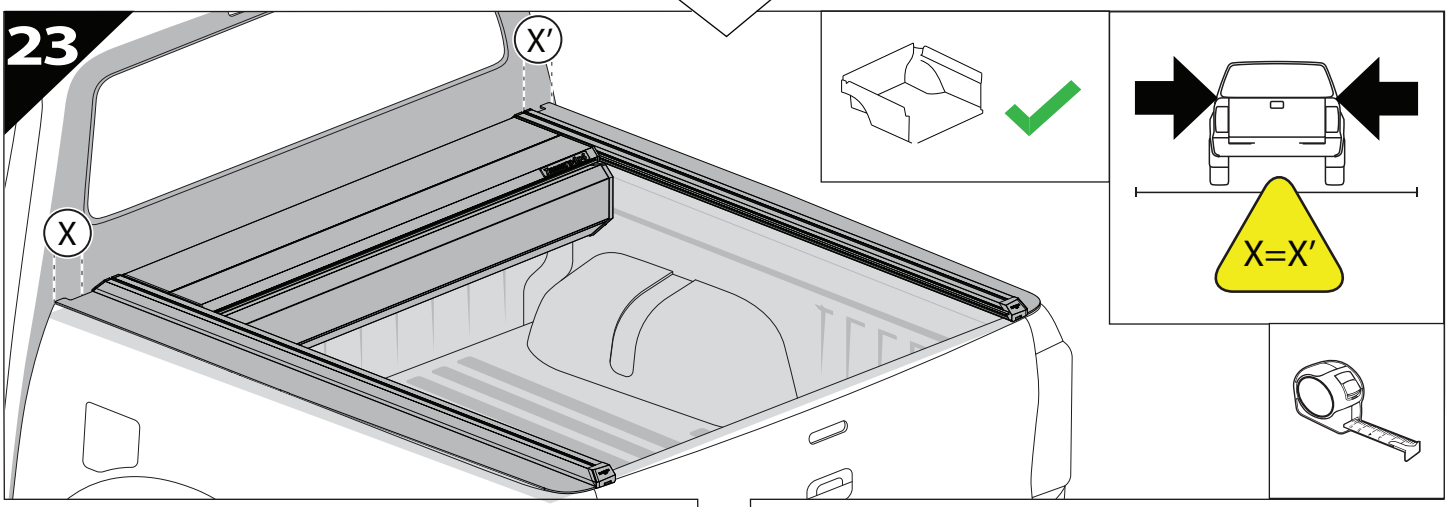
23
X'
X
X=X'

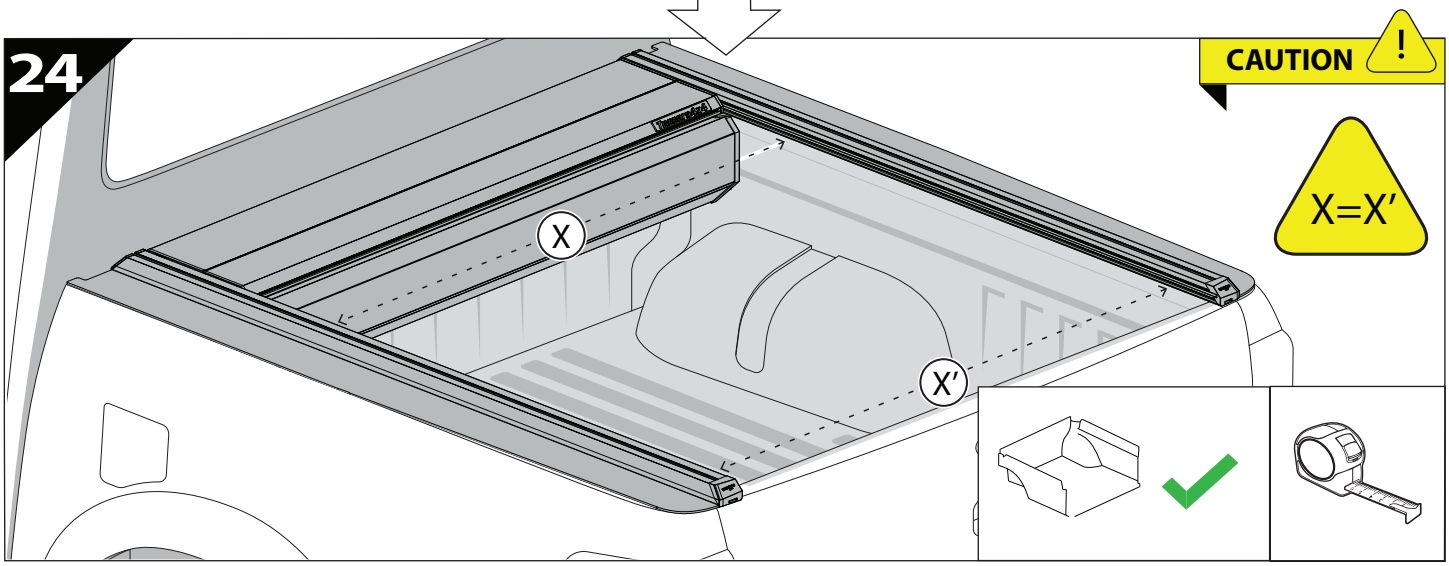
24
CAUTION
X=X'
X
X'

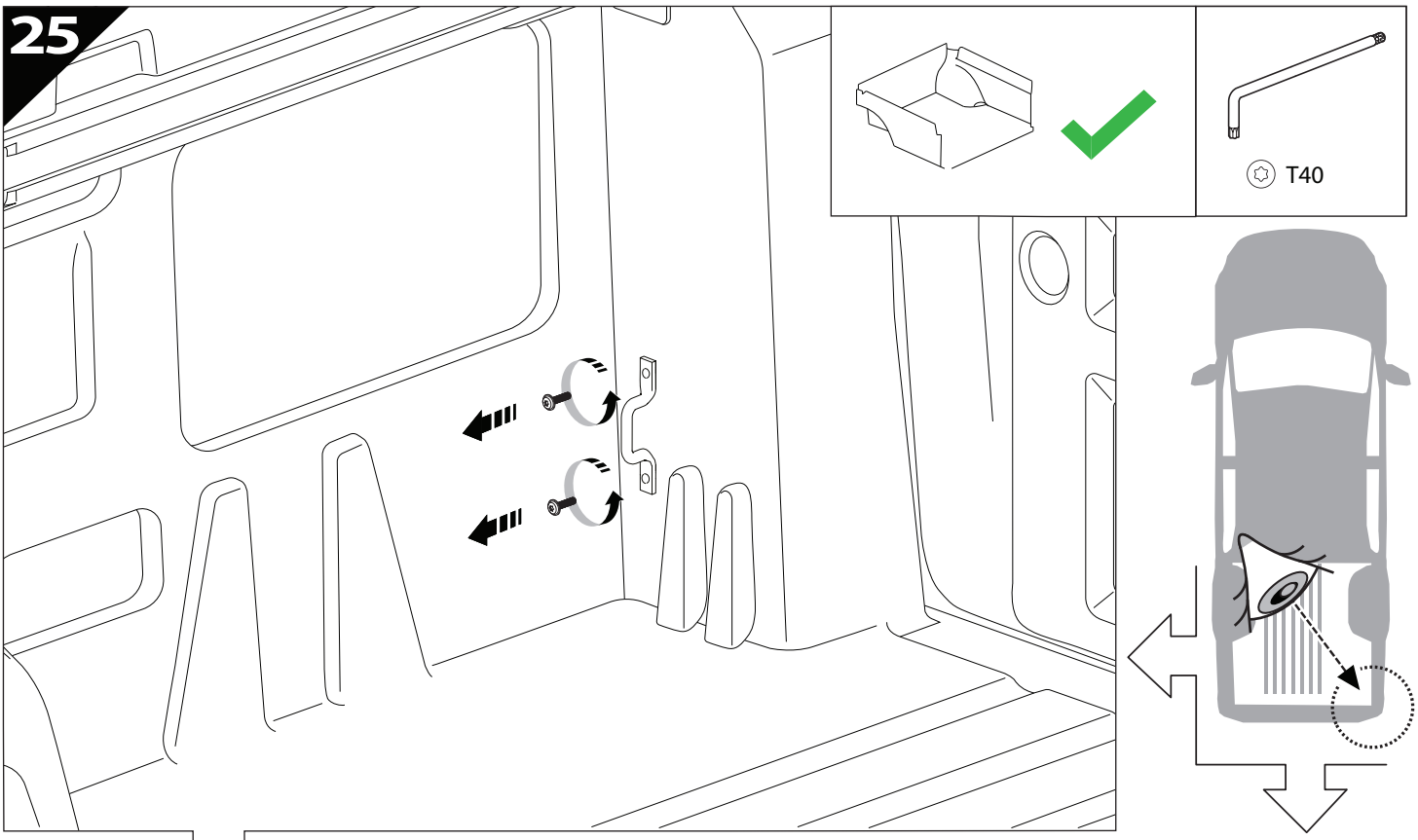
25
T40

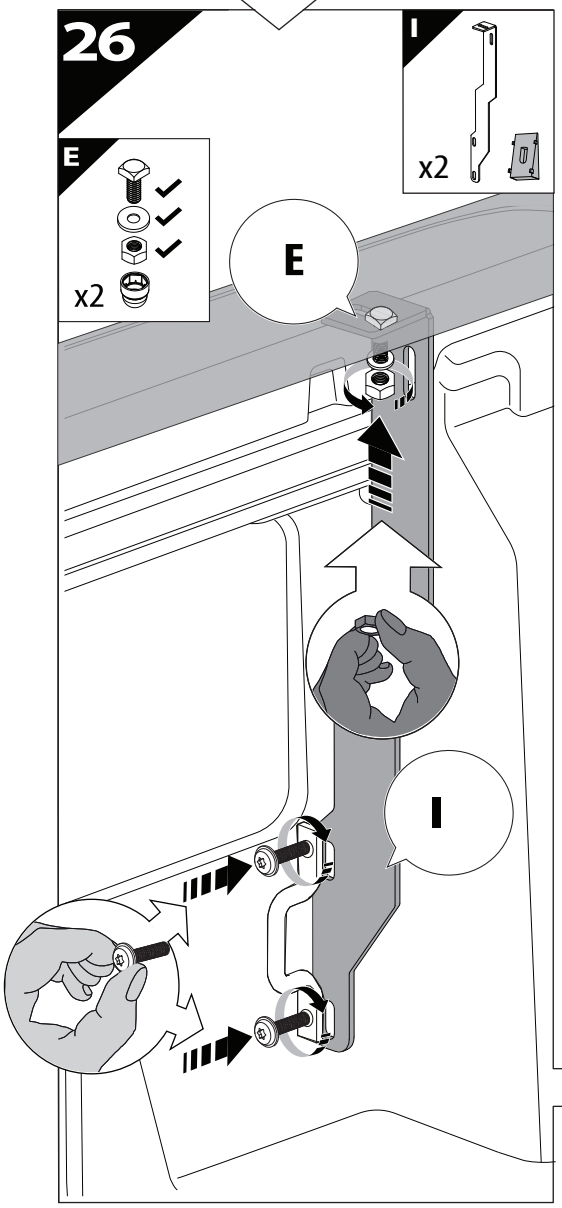
26
E
x2
I
x2
E
I

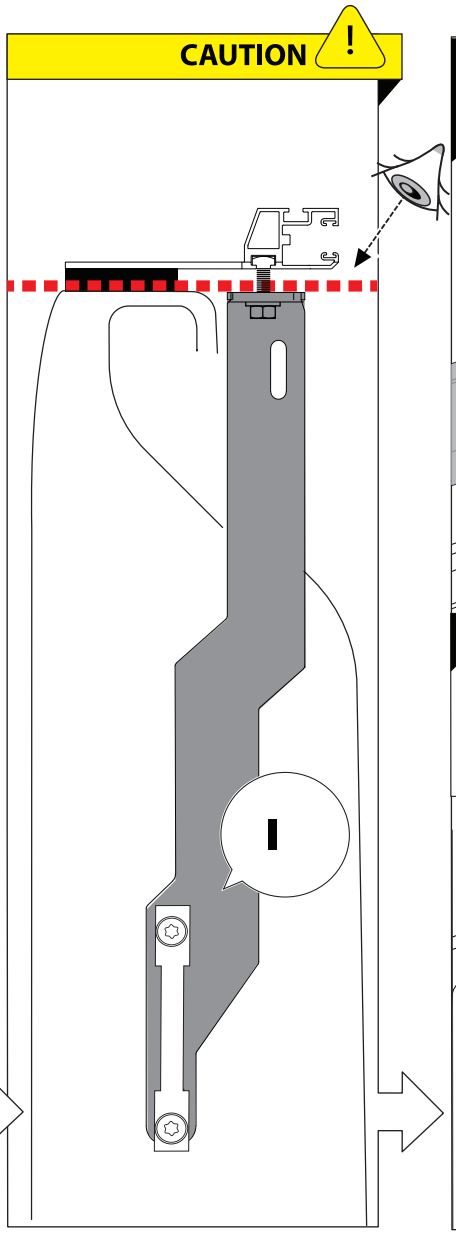
CAUTION
!
I

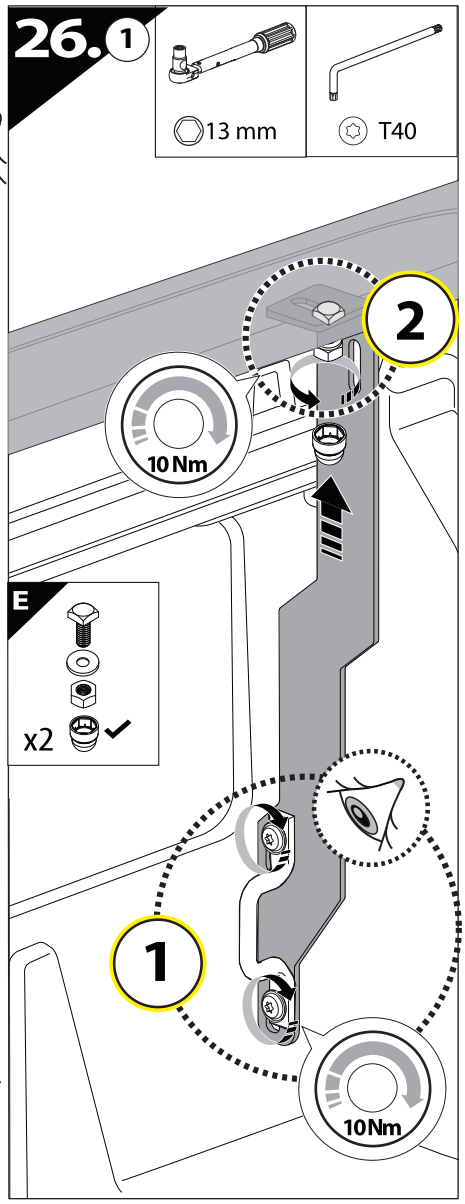
26.1
13 mm
T40
2
10 Nm
E
x2
1
10Nm

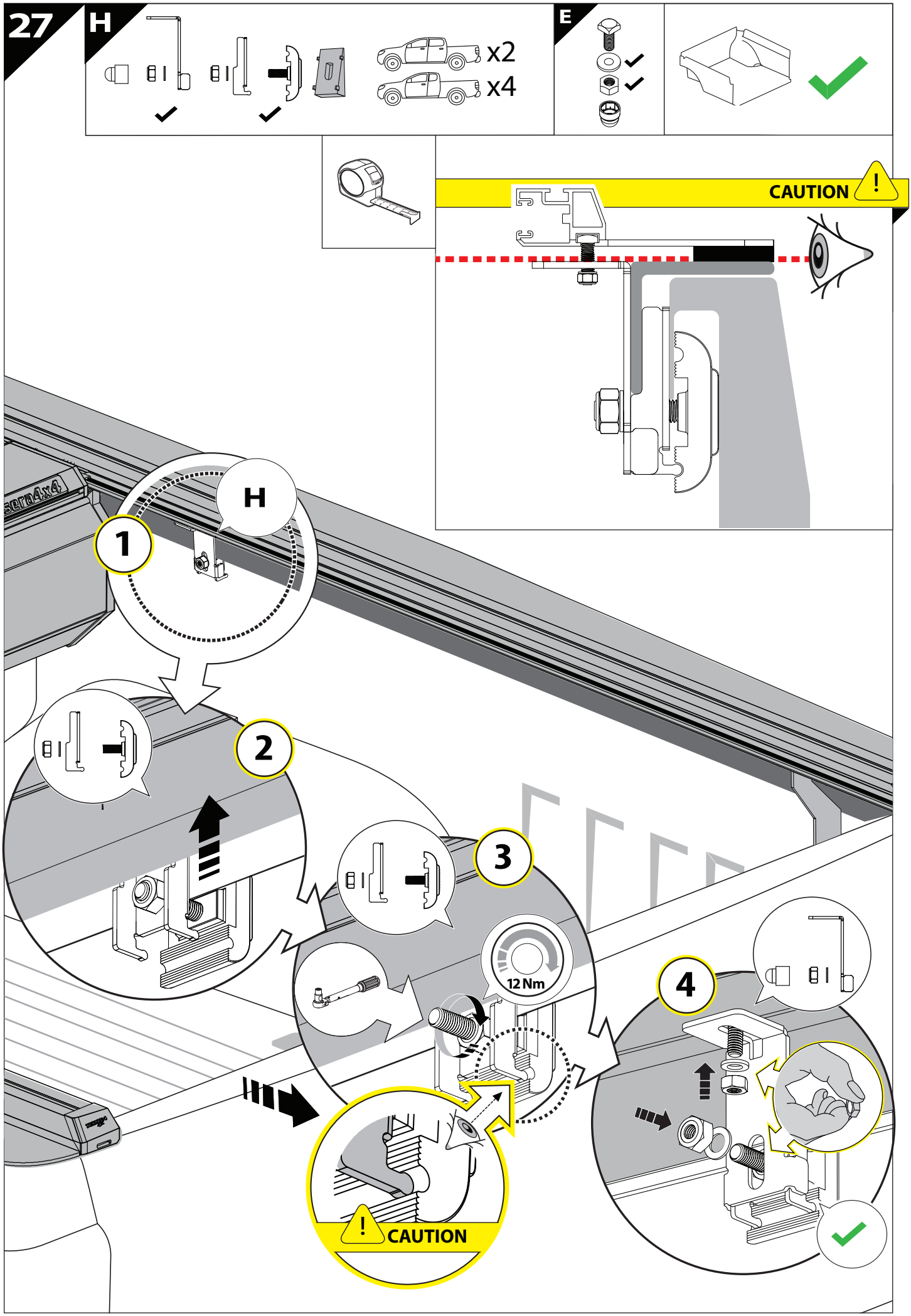
27
H
x2
x4
E
CAUTION
H
1
2
3
12 Nm
4
CAUTION

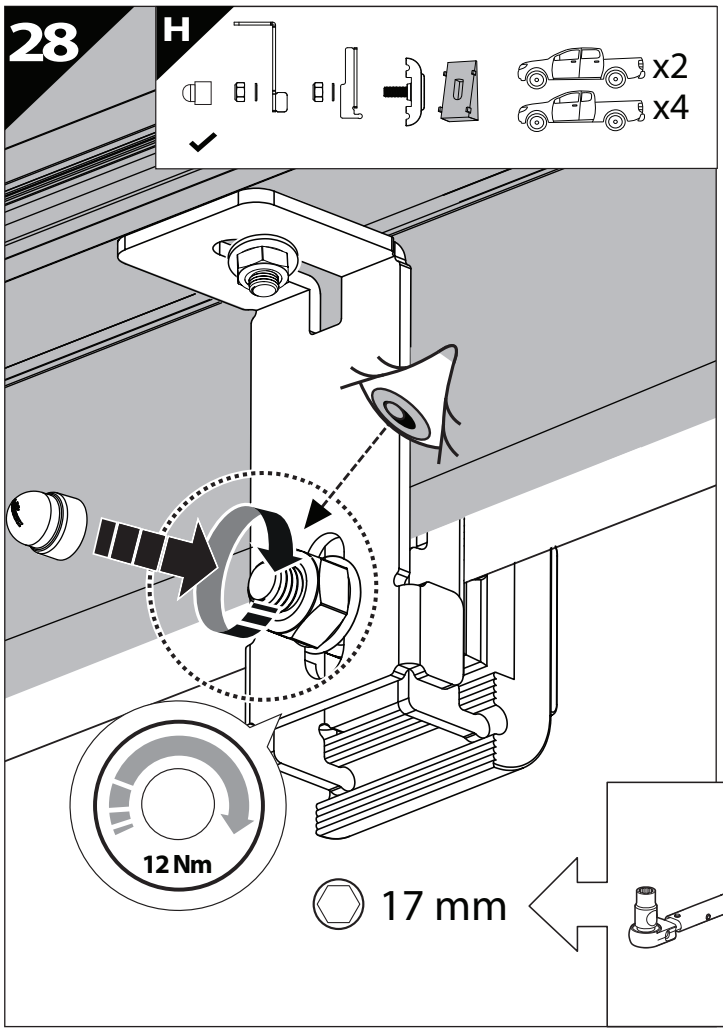

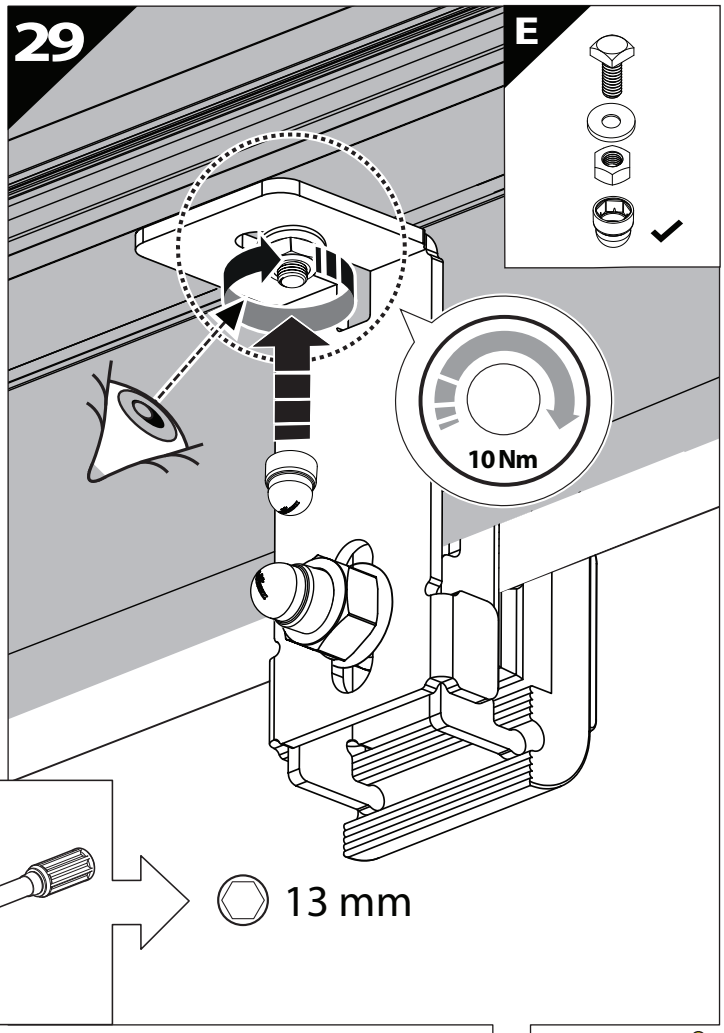

CAUTION

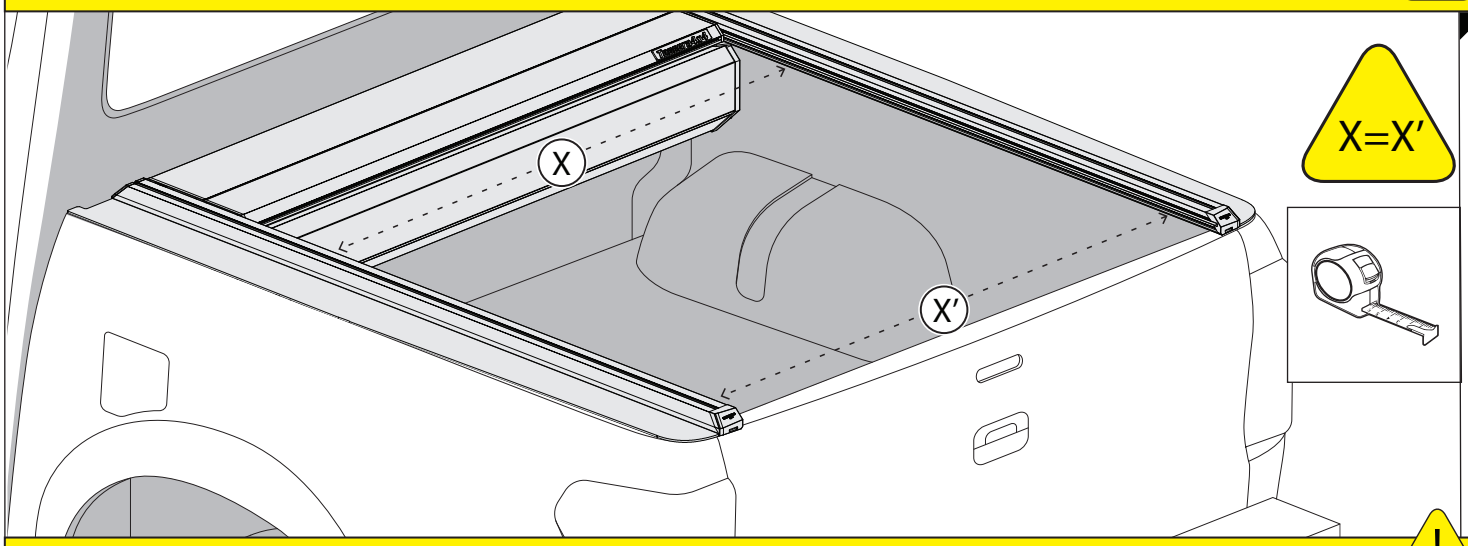

CAUTION

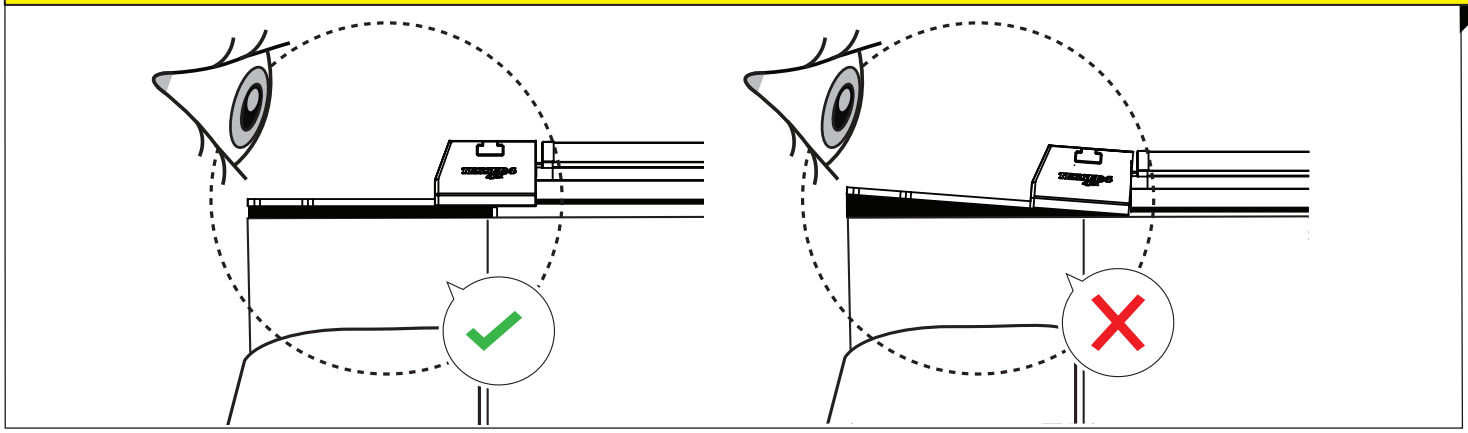

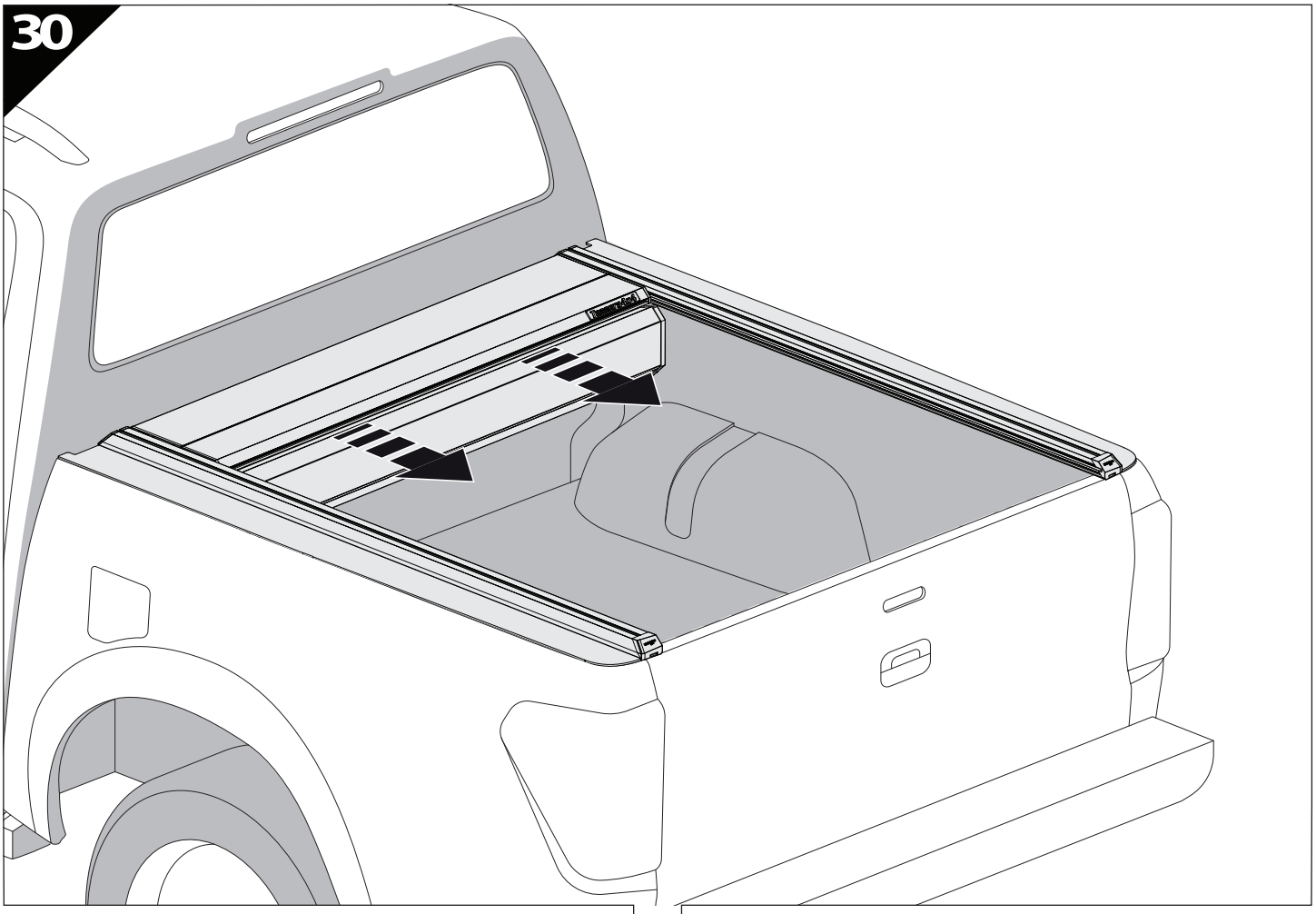
30

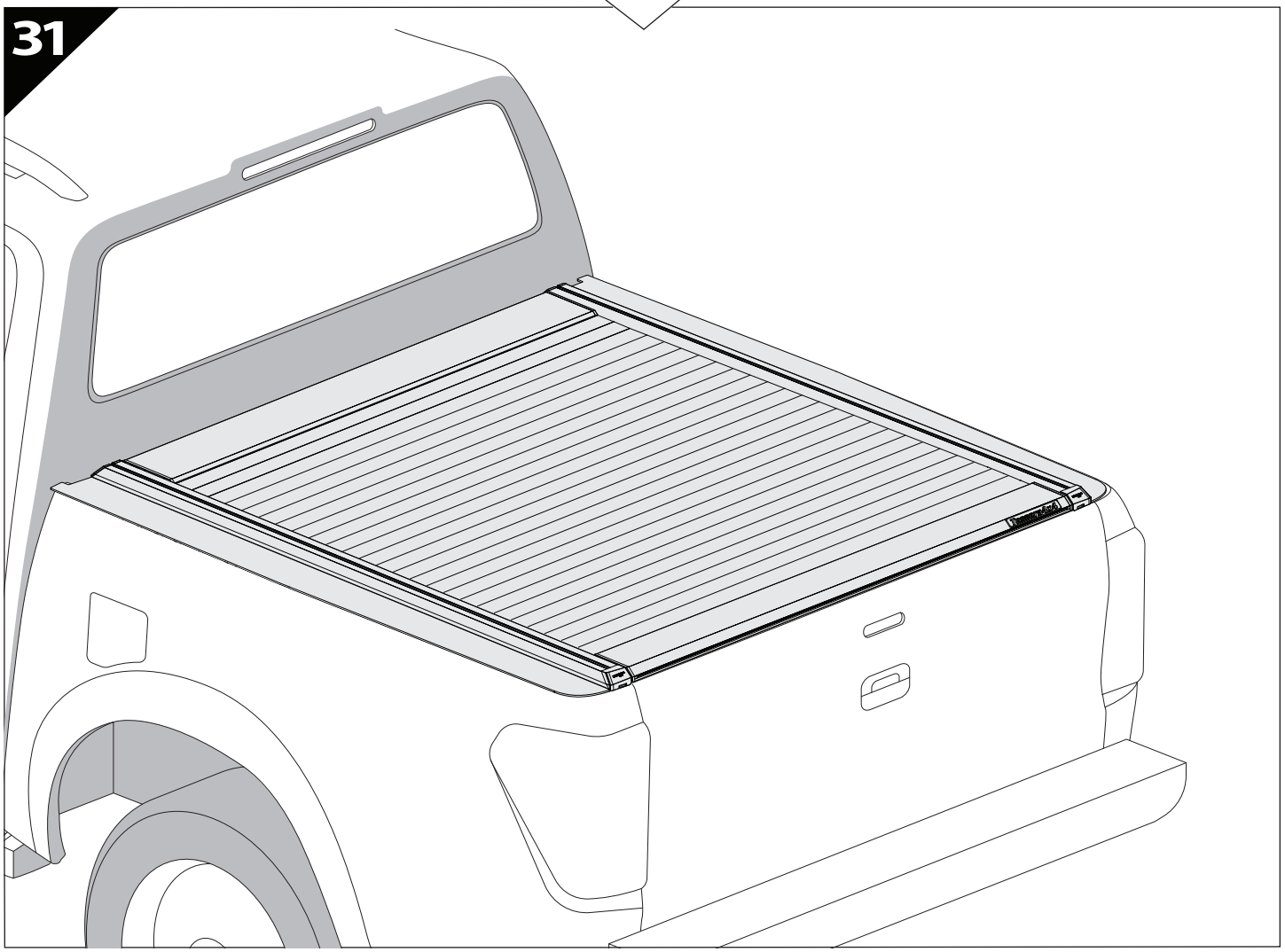
31

TESSERA 4x4
OFF ROAD ACCESSORIES
Think Quality!

GR:	Οδηγίες Εγκατάστασης	H:	Szerelési utasítás
GB:	Installation manual	P:	Instruções de instalação
SF:	Asennusohje	RUS:	Инструкция по установке
F:	Notice de montage	N:	Monteringsveiledning
PL:	Instrukcja montażu	D:	Einbauanleitung
NL:	Installatie-instructies	CZ:	Návod k instalaci
TR:	Montaj Talimatı	I:	Istruzioni de montaggio
S:	Monteringsanvisning	DK:	Monteringsvejledning
E:	Instrucciones de montaje	RO:	Instructiuni de instalare

Customer Service: +30 (210) 5541161, +30 (210) 5541154 (08:00 - 16:00 EET)

Support department: info@gianso.gr

Website: www.tessera4x4.com

Address: 19.5 km of National road Athens-Korinthos (Elefsina) Greece, P.C: 19200